RULES AND REGULATIONS

OF THE

OFFICE OF THE COUNTY ENGINEER

GOVERNING
THE SURFACE PHYSICAL IMPROVEMENTS
FOR PRIVATE DEVELOPMENTS WITHIN THE
UNINCORPORATED AREAS OF HAMILTON COUNTY

ISSUED BY THE BOARD OF COUNTY COMMISSIONERS
HAMILTON COUNTY, OHIO

EFFECTIVE – APRIL 1, 2006

TABLE OF CONTENTS

ARTICLE I	**Improvement Plan**	**Pg. 1**
ARTICLE II	**Street Details**	**Pg. 5**
ARTICLE III	**Construction Methods**	**Pg. 13**
ARTICLE IV	**Review and Approval**	**Pg. 33**
ARTICLE V	**Record Plat**	**Pg. 40**
ARTICLE VI	**Frontage Subdivisions**	**Pg. 43**
ARTICLE VII	**Bonding Requirements**	**Pg. 45**
APPENDIX "A, B, C"	**Performance Surety Forms**	**Pg. 47**
APPENDIX "D, E, F"	**Maintenance Surety Forms**	**Pg. 51**
APPENDIX "G"	**Testing Procedures by Independent Test Laboratories**	**Pg. 55**
APPENDIX "H"	**Improvement Plan Review Form**	**Pg. 56**
APPENDIX "I"	**Application To Construct**	**Pg. 57**
STANDARD DRAWINGS		**Pg. 58**

All references in this manual to "Hamilton County Engineer's Subdivision Rules and Regulations", "Hamilton County Engineer's Standards" or "this manual" shall be considered to mean the "RULES AND REGULATIONS OF THE OFFICE OF THE HAMILTON COUNTY ENGINEER GOVERNING THE SURFACE PHYSICAL IMPROVEMENTS FOR PRIVATE DEVELOPMENTS WITHIN THE UNINCORPORATED AREAS OF HAMILTON COUNTY".

TABLE OF CONTENTS

ARTICLE I IMPROVEMENT PLAN

101 Sight Distance Study
- **A.) Plan View**
- **B.) Sight Distance**
- **C.) Speed Limits**

102 Elevations

103 Improvement Plan
- **A.) Detail Section**
- **B.) Street Delineation**
- **C.) Cross Sections & Locations**
- **D.) Profile Grade**
- **E.) Sewers & Other Drainage**
- **F.) Rules & Regulations**

104 County/State Road Right-of-Way

105 Township Maintained Right-of-Way

106 Right-of-Way Centerline

107 Subdivision Review Fees

108 Improvement Plan Revision

109 Inspection Fees

GENERAL

The following Subdivision Rules and Regulations, standards, specifications, etc., are written for the guidance of the developer, his engineer, and the public approving authorities, and to supplement the Rules and Regulations of the Hamilton County Regional Planning Commission.

ARTICLE I
IMPROVEMENT PLAN

All plats or plans submitted shall be twenty-four inches by thirty-six inches (24" x 36") in size and must bear the seal and signature of the Registered Professional Engineer, licensed to practice in the State of Ohio.

101 SIGHT DISTANCE STUDY

Prior to submission of an Improvement Plan, two copies of a **SIGHT DISTANCE STUDY** shall be submitted to the Hamilton County Engineer for review. This study must be prepared by a Professional Engineer licensed to practice in the State of Ohio. The sight distance study and related documents shall bear the seal of the Engineer. The study shall include the following:

A.) A plan view of the Subdivision access point(s).

B.) An intersection Sight Distance Analysis that shall cover all proposed access points to public roads, This shall include left turn in movement. Intersection design shall conform to the AASHTO requirements as specified in the current edition of ***A Policy on Geometric Design of Highways and Streets***.

C.) The posted speed limits on existing roads. The sight distance study shall be reviewed by the Hamilton County Engineer. A sight distance study letter stating results of the review shall be prepared and forwarded to the Regional Planning Commission.

102 ELEVATIONS

All elevations shall be referenced to sea level datum and each plat shall show the description and elevation of the benchmark used for the subdivision survey.

Base flood elevations and boundaries of Special Flood Hazard Areas, as defined in Section 3.2 of the Hamilton County Subdivision Rules and Regulations of the Hamilton County Regional Planning Commission for the Subdivision of Land, shall be noted and followed.

103 IMPROVEMENT PLAN

The Improvement Plans shall include:

A.) A detailed section of the proposed street(s).

B.) The streets delineated in plan, showing radii, functions of curves, etc.

C.) Cross sections and locations of all existing structures, drives, etc., which may be affected by improvement when a proposed street is adjacent to property not owned by the developer (out lots).

D.) Existing ground profile and proposed grades. Where a street ends at a property line or may be extended in the future, the profile shall be shown for two hundred feet (200') beyond the subdivision property line or end of street.

E.) All necessary proposed sewers and other necessary drainage structures shall be shown in plan and profile; water lines to be shown in plan or covered by a note which states the manner in which said water lines and appurtenances shall be designed and determined.

F.) A note as follows: All plans and construction within Hamilton County shall comply with the Subdivision Rules and Regulations of the Hamilton County Engineer governing the surface physical improvements for private developments within the unincorporated areas of Hamilton County effective April 1, 2006.

104 COUNTY/STATE ROAD RIGHT-OF-WAY

All proposed subdivisions abutting a county or state road shall provide in-fee right-of-way width in accordance with the current "Thoroughfare Plan". For any dead end roads or streets not included in/on the "Thoroughfare Plan," the minimum width of right-of-way shall be forty feet (40') for residential subdivisions and sixty feet (60') for commercial subdivisions.

105 TOWNSHIP MAINTAINED RIGHT-OF-WAY

Minimum widths of right-of-way for township streets shall be as follows:

Residential streets

Fifty feet (50') right-of-way for subdivision streets.
Forty feet (40') right-of-way for subdivision streets with "AA" zoning.
Forty Feet (40') right-of-way for P.U.D. Public Street (See Standard No.8)

Commercial streets

Sixty feet (60) right-of-way for subdivision streets.
See Standard Drawings

106 RIGHT-OF-WAY CENTERLINE

The pavement centerline shall be centered within the right-of-way.

107 SUBDIVISION REVIEW FEES

The Improvement Plan shall be reviewed by the County Engineer's staff for compliance with this manual and for engineering features.

A subdivision review fee shall be required from the developer prior to review of plans to cover the costs of the review. A fee payable by check to THE HAMILTON COUNTY TREASURER shall be One Hundred Twenty dollars ($120.00) for the first submittal.

Providing that the necessary corrections are made as the result of the initial review and providing that no other changes have been made to the plans, no further fee will be charged.

When plans required to be re-submitted for review following necessary corrections, changes or revisions, a review fee of Forty Five Dollars ($45.00) per hour will be changed. This shall also apply to any subsequent re-submissions.

NOTE – See Appendix "H"

108 IMPROVEMENT PLAN REVISION

After approval of the Improvement Plan, no revision in engineering features will be permitted until said revisions have been approved by the Office of the County Engineer and other appropriate agencies.

109 INSPECTION FEES

The developer will be billed for all inspection charges at the rates for inspectors prevailing at the time of construction. See Article III, Section 303-H for Hamilton County Engineer Fees.

TABLE OF CONTENTS

ARTICLE II STREET DETAILS

201 Plan
- **A.) Adequate Sight Distance**
- **B.) Street Improvements**
- **C.) Curb Radius**
- **D.) Street Termini**
- **E.) Paving Limits**
- **F.) Geometrics**

202 Profiles and Grades
- **A.) Proposed Grade**
- **B.) Street Grade**
- **C.) Cul-de-sac Grades**
- **D.) Vertical Curves**
- **E.) Flood Elevations**
- **F.) Proposed Street Extension**

203 Typical Sections
- **A.) Standard Drawings**
- **B.) Minimum Width**
- **C.) Concrete Curbs**
- **D.) Typical Sections**
- **E.) Industrial Subdivisions & "A-A" Zoning**
- **F.) Variance Requests**

204 Driveways and Drive Aprons
- **A.) Material Specifications & Thickness**
- **B.) Placement**
- **C.) Grades**
- **D.) County Road Application**

205 Sidewalks

206 Downspouts

207 Sump Pump Discharges

208 Underdrains

209 Utilities

210 Right-of-Way Limitations

211 Decorative Entrances
- **A.) Full Details**
- **B.) Sight Distance**
- **C.) Utility Services**
- **D.) Fees**
- **E.) Islands**
- **F.) Back of Curb/Edge of Pavement**
- **G.) Service Branches/Installations**
- **H.) Utility Company Approvals**
- **I/J.) Service Branches/Restriction**

212 Street Name Signs

213 P.U.D. Public Streets

ARTICLE II
STREET DETAILS

201 PLAN

A.) Subdivision street intersections, including connections to existing County Roads shall be located such that adequate sight distance is provided. The requirements for sight distance, prior to Improvement Plan approval, are as specified in the ***Ohio Department of Transportation Location and Design Manual*** and ***A Policy on_Geometric Design of Highways and Streets*** prepared by the American Association of State Highway and Transportation Officials (AASHTO).

B.) Subdivision street connections to Hamilton County roads shall meet the intent of the "Access Management" plan of the Hamilton County Engineer.

C.) The plan for street improvements in the subdivisions shall show the stations and angles to all intersecting streets and turnarounds.

D.) All intersecting streets shall have a minimum back of curb or edge of paving radius of twenty-five feet (25'), except that at intersection with (connections to) existing state or county roads, the radius shall be thirty five feet (35') for residential subdivisions and fifty feet (50') for industrial subdivisions.

E.) All proposed street termini should be in accordance with Subdivision Standard Drawing No. 9.

F.) The limits of all paving shall be clearly noted on all drawings. All streets shall be paved to the limits of the subdivision, or as shown on Subdivision Standard Drawing No. 9.

G.) For main thoroughfares, the minimum radius of curvature along the centerline shall be five hundred feet (500'); for secondary thoroughfares, three hundred fifty feet (350') for important residential streets, two hundred feet (200') and for minor residential streets, one hundred feet (100'). All horizontal curves shall be identified by listing complete curve data of the curves. Each point of curvature (PC) and point of tangency (PT) shall be properly stationed.

NOTE: In unusual circumstances and upon written appeal by the developer, The County Engineer may approve variations of any of the radius and profile grade requirements of these rules and regulations.

Note: In the foregoing section 201G and 202B below, the following shall apply:

A main thoroughfare is one that will serve more than ninety (90) parcels or one that will connect or may serve as a connection of two county roads.

A secondary thoroughfare is one that will serve sixty-one (61) to ninety (90) parcels.

An important residential street is one that will serve thirty-one (31) to sixty (60) parcels.

A minor residential street is one that will serve less than thirty (30) parcels.

202 PROFILES AND GRADES

A.) All proposed grades shall be the centerline grades of the respective streets and shall be indicated in complete detail in profiles and referenced to the stationing shown on the plan.

B.) The maximum profile grades shall not exceed six percent (6%) for main thoroughfares, eight percent (8%) for secondary thoroughfares, ten percent (10%), for important residential streets and twelve percent (12%) for minor residential streets (see note following 201G above) Profile grades across intersections shall not exceed four percent (4%) except with specific approval of the County Engineer. The minimum grade of all streets of all streets shall be one and two tenth percent (1.2%).

C.) In street cul-de-sacs the maximum profile grade shall not exceed four percent (4%) and the minimum profile grade shall not be less than one and two-tenths percent (1.2%).

D.) All changes in grade shall be connected by vertical curves of minimum length equal to fifteen (15) times the algebraic difference in rate of grade for thoroughfares, and one-half (1/2) this minimum length for streets. The Point of Vertical Curvature (PVC) and the Point of Vertical Tangency (PVT) of all vertical curves shall be stationed and elevations shall be shown at least every twenty-five feet (25') within the limits of vertical curves.

E.) The profile grade for streets shall be maintained a minimum of one-foot (1') above the base flood elevation for areas included in Section 3.2 of the Flood Damage Prevention Regulations of the Hamilton County Department of Public Works.

F.) Wherever a proposed street is an extension of a previously constructed street which is not part of the proposed subdivision, profile grades shall be developed for at least the last two hundred feet (200') of the existing street which will abut the new extension. This is to insure a smooth transition of pavement, gutters and sidewalks. Particular attention shall be given to any pavement overlays that would affect the proposed improvement. Details of connections shall be shown on the Improvement Plans.

Similar consideration shall be given to intersections of proposed streets to existing county or township streets.

203 TYPICAL SECTIONS

A.) Subdivision Standard Drawings are on file in the Office of the Hamilton County Engineer.

B.) The roadway pavement section for all public streets shall have a minimum width of twenty-eight feet (28') back to back of curbs (For exceptions see Section 203-E below.)

C.) All public streets shall have Portland Cement Concrete curb or combined curb and gutter. (Exceptions may be made, upon written application by the developer to the Hamilton County Engineer, on "A-A" Zone starts, where flat grades exist and as agreed to by the Hamilton County Soil and Water Construction District.)

D.) Typical sections shall be drawn in accordance with the Subdivision Standard Drawings.

1. Concrete curb and gutter shall be twenty-eight inches (28") wide (see Standard Drawing No. 1).
2. The entire right-of-way of all streets shall be graded the full width between property lines with appropriate slopes for cuts and fills beyond said property lines. Proof of necessary right-of-way for above may be required (see Standard Drawing No. 4).

E.) Standard Drawing No. 2 shall be used in areas zoned Light Industrial "F" or Heavy Industrial "G", or one constructed in an unzoned area for Industrial uses, or high density multifamily areas. Standard twenty- eight-inch (28") curb and gutter shall be used with flexible pavement. Standard Drawing No. 7 shall be used for "A-A" zone streets.

F.) Standard drawing 8 shall be used for PUD Public streets. A PUD public street is a street with reduced right-of-way and pavement width in a residential planned unit development that has been approved as a subdivision by the Hamilton County Regional Planning Commission. A PUD public street shall comply with the details and typical section as shown on Standard No. 8.

Note: The P.U.D. Public Street designation and related details herein shall refer to any "Planned Development" Public street.

G.) Where on-site conditions inhibit or prohibit construction of Standard Typical Sections, in areas beyond the pavement shoulder, the developer shall submit a written request for approval of a variance from the typical section. The request shall include cross sections and other details of the existing and proposed ground lines. Cross sections and other details shall be included in the Subdivision Improvement Plans.

204 DRIVEWAYS AND DRIVE APRONS

A.) All residential subdivision drive aprons within the public street right-of-way shall be constructed of Portland Cement Concrete, Class "C" as described in the O.D.O.T. Construction and Material specifications, five inches (5") minimum thickness. The residential drive aprons, which are constructed along county roads, shall be seven inches (7") minimum thickness.

B.) Drive aprons within the public street right-of-way for non-public streets having five (5) or more residents shall be constructed of either (1) eight inches (8") of Portland Cement Concrete, Class "C' as described in the O.D.O.T. Construction and Material Specifications or (2) Six inches (6") of 302 asphalt concrete base, three inches (3") or 448 asphalt concrete surface course. 407 tack coat shall be applied between the intermediate and surface course.

C.) Drive Aprons within the public street right-of-way for multi-used drives servicing less than five (5) residents shall be constructed with seven (7) inches of Portland Cement Concrete, Class "C" as described in the O.D.O.T. Construction and Material Specifications.

D.) Drive Aprons for commercial drives shall be constructed of eight inches (8”) minimum thickness of Portland Cement Concrete, Class “C” as described in the O.D.O.T. Construction and Material Specifications.

E.) No part of any driveway apron within the road right-of-way shall be installed within five feet (5’_ of any inlet, fire hydrant, utility pole or guide wire anchor, nor shall a driveway be installed within ten feet (10’) of the end of a stub street pavement.

F.) Driveway grades shall conform to berm slopes as shown on typical sections or as required in the Hamilton County Engineer’s Permit Manual.

G.) For driveways and other items of work along existing County roads, the Hamilton County Road Typical Section shall apply. See Standard Drawing No. 11 and/or No. 12 for proper application.

H.) The developer shall make reasonable efforts to insure that in all cul-de-sac areas a “Clear Zone” with a minimum width of twelve feet (12’) shall be provided behind the curb for snow storage purposes. This area shall be fee of fire hydrants and drive aprons. The developer must insure that builders are aware of this requirement, which also must be included on the plans. Standard drawings No. 9.

Note: In A, B, C and D above, one half inch (1/2”) preformed expansion joint material, shall be installed, full depth, where Portland Cement Concrete driveway abut the back of the curb.

205 SIDEWALKS

One course Portland Cement Concrete Sidewalks, Class “C” Concrete, four feet (4') in width and four inches (4") in thickness shall be constructed where shown on the subdivision plans or typical sections. The thickness shall be five inches (5") for sidewalks constructed along commercial subdivision streets, for those portions of sidewalks within residential drive apron limits and for those constructed as part of a frontage subdivision along existing state, or county roads.

One half-inch (1/2") full depth expansion joints shall be installed at intervals not to exceed one hundred feet (100'). All sidewalks, including curb ramps, shall connect to the pavement or curb with one-half (1/2") full depth expansion joint material between the walk and curb.

Curb ramps shall be installed as part of the sidewalk construction at intersecting streets. Details shall be in accordance with ODOT-Standard Drawings 7-12-02 pg. 1-3.

For subdivisions which include sidewalks and no sidewalk currently exist along the existing frontage road (county, state or township roads), care must be exercised by the designer and developer in the location and construction or sidewalk terminal points at the frontage road approaches. The sidewalks shall be designed and constructed to insure that there is a minimum distance between the near edge of the crosswalk and the curb ramps. Note: The position of stop signs is described in section 24-5 of the O.D.O.T. manual of uniform traffic control.

At the point when certificates of occupancy have been issued for eighty-five percent (85%) of the building on any street within the subdivision and there has been no construction activity for a six (6) month period, all sidewalks shall be installed, without gaps, on that street to provide safe and convenient passage/usage for pedestrians. This is the developers' responsibility and shall be noted on the plans.

206 DOWNSPOUTS

Building downspout pipe outlets should be installed in the following order of priority.

1.) To rear of proposed lot
2.) By connection to a collector pipe installed parallel to the street curb. See Standard Drawings No. 4 and 8.
3.) To nearest storm sewer inlet or storm manhole.
4.) By approved connection to a storm sewer (one 6" connection per lot.)
5.) To nearest natural drainage course, i.e. natural swale or existing ditch.

Except for extremely unusual cases as determined by the Hamilton County Engineer, after written request by the developer, no downspouts shall be outletted through curb cuts.

In ***NO*** case shall downspout effluent be permitted to flow across sidewalks or drive aprons.

207 SUMP PUMP DISCHARGES

Sump pump effluent outlets and/or foundation drains shall be connected to downspout outlet pipes (if applicable) and shall be connected to the storm sewer system as described in Section 206 above. Storm sewer lateral connections shall be installed in such a manner that no obstruction to the storm sewer or lateral collection line occurs.

In ***NO*** case shall sump pump discharges be permitted to flow across sidewalks, drive aprons or through curb cuts.

208 UNDERDRAINS

At sag points in the vertical street profile, an underdrain shall be installed on both sides of the street and extend thirty feet (30') in each direction from the sag point catch basins.

The underdrain shall consist of four inch (4") perforated plastic conduit (PVC Sch 40 or equal). Installation shall be in accordance with details shown on Subdivision Standard Drawing No. 6

209 UTILITIES

The location of utilities within a subdivision shall be as shown on Standard Drawings No. 4, 5 and 8. Utility easements shall be provided by the developer/owner and shall be recorded and shown on the approved Improvement Plan and Record Plat. The utility easements shall be described and recorded in such a manner that all utilities involved, such as storm sewer, sanitary sewer, water supply agencies, gas supply, electric supply, telephone and cable companies, have the right to occupy same for required maintenance or reconstruction as well as original construction. The utility easement may also be occupied during any construction or reconstruction within the abutting street right-of-way.

210 RIGHT-OF-WAY LIMITATIONS

The completed roadway between right-of-way lines shall be free of obstructions including private utilities (surface and underground) unless a revocable agreement has been approved by both the inspecting and maintaining agencies. An exception to this limitation is breakaway, non-decorative mailbox supports. The intent of this limitation is to control/prevent installation of items, which are or can become a hazard to motorists, pedestrians or agencies that may have to perform maintenance operations in the future.

211 DECORATIVE ENTRANCES

Decorative entrances to subdivisions must meet the following conditions:

A.) Full details, including plans for utility service, signs, landscaping, etc. within public right-of-ways, shall be included on the subdivision plans submitted for approval.

B.) The requirements for adequate sight distances as included elsewhere in this manual shall be met and this shall apply to portions of entrance structures on private property.

C.) Separate services for electric, water or other utility services shall be provided for each side of the entrance street.

D.) The developer shall be responsible for maintaining, including the payment, to the appropriate utility company for installation and service charges of the installed items, until such time as they are turned over to a viable, established Homeowner's Association.

E.) When an island is included as part of an entrance design, the developer or the developer’s engineer must contact the affected township and have them provide a variance approval letter to the Hamilton County Engineer’s Subdivision Department. The island design must provide adequate turning radius for large/long vehicles such as moving vans and fire department vehicles.

F.) Those portions of an island beyond back of curb or edge of pavement shall be listed as a separate lot with eventual title in the name of the Homeowner's Association. The island lot shall be an undivided lot and shall contain no utility easements.

G.) Service branches serving an island lot shall be installed prior to pavement construction. Electrical or gas service may, with the approval of the utility company, be installed after paving, providing conduits are installed for them prior to paving. Water service branches shall be installed as approved by the agency providing water service.

H.) The utility branches to, and all lines within the island, shall be in a location as approved by the various utility companies/agencies.

I/J.) No service branches to house lots on either side of the subdivision street shall pass under any portion of the private island lot.

212 STREET NAME SIGNS

Prior to occupancy by the owner of a building within a new subdivision, street name signs shall be provided and erected by the Developer at all street intersections involved in that subdivision which provide access to the building.

The signs shall meet the requirements of the Ohio Manual of Uniform Traffic Control Devices (current edition) as to material, size, shape, color, location and mounting height. Sign supports shall conform to the type used by the jurisdiction having ultimate maintenance of the streets.

In unusual circumstances, the signs may be placed on temporary supports. Such installation must be approved by the inspecting agency but in no case shall temporary supports be permitted once fifty percent (50%) of the buildings on a street are owner occupied. Installation of signs on permanent supports is a condition for street acceptance.

213 P.U.D. PUBLIC STREETS

The P.U.D. public street designation and related details herein shall refer to any "planned development" public street.

TABLE OF CONTENTS

ARTICLE III CONSTRUCTION METHODS

301 Requirements for Start of Construction

302 Specifications and Standard Drawings
- **A.) Specifications**
- **B.) Standard Drawings**
- **C.) Sewers**
- **D.) Water Lines**

303 Inspection

304 Testing

305 Embankment

306 Backfilling of Trenches

307 Preparation of Subgrade

308 Rigid Pavement
- **A.) Subgrade**
- **B.) Subdivision Standard Drawings**
- **C.) Forms**
- **D.) Slip Form Paving**
- **E.) Joints**
- **F.) Placing Concrete**
- **G.) Final Finishing**
- **H.) Surface Smoothness**
- **I/J.) Integral Concrete Curb**
- **K.) Curing**
- **L.) Form Removal**
- **M.) Sealing Operations**
- **N.) Admixtures**
- **O.) Weather Limitation**

309 Flexible Pavement
- **A.) Subgrade**
- **B.) Combination Concrete Curb and Gutter**
- **C.) Bases**
- **D.) Intermediate Course**
- **E.) Surface Course**
- **F.) Approach to Subdivision**

310 Driveways

311 Sidewalks

ARTICLE III
CONSTRUCTION METHODS

301 REQUIREMENTS FOR START OF CONSTRUCTION

No public street construction, or any operations that might effect the stability of a public street, shall start until the developer has made application for a permit to construct the physical improvements, has deposited the necessary fees to cover inspection costs and has received the necessary permit. The foregoing shall be accomplished at the office of the Hamilton County Engineer, Room 700, County Administration Building, 138 East Court Street, Cincinnati, OH 45202 (see Section 303-H. for fee schedule).

Any public street construction started PRIOR to having plans approved, fees paid and permits secured is subject to complete removal of the constructed items. This includes but is not limited to embankment to support streets, subgrade preparation, curbs, pavements, sidewalks, drive aprons, storm sewers and appurtenances in the public right-of-way unless certified testing by a Professional Engineering firm has been provided and documented.

302 SPECIFICATIONS AND STANDARD DRAWINGS

A.) Streets, including all improvements in Subdivisions, shall be constructed in accordance with the Hamilton County Engineer's Subdivision Rules and Regulations, Ohio Department of Transportation "Construction and Materials Specifications", including amendments thereto, in effect on the date of approval of the Improvement Plan.

B.) Standard Drawings shall be either Ohio Department of Transportation Standards, or Hamilton County Engineer's Standards, all of which are on file in the office of the County Engineer. In event of conflict, the Hamilton County Engineer shall determine the appropriate Standard Drawing to be used.

C.) Sewers: Refer to appropriate Standard Drawings and Specifications on file in the office of the Hamilton County Department of Public Works for Storm Sewers, and to those of Metropolitan Sewer District of Greater Cincinnati for Sanitary and Combined Sewers.

D.) Water Lines: Refer to the appropriate Water Works Rules and Regulations, Standard Drawings and Specifications of the agency having jurisdiction.

303 INSPECTION

A.) PUBLIC STREETS
This includes work along existing public roads and streets and all streets within the subdivision, which will become publicly maintained at time of final inspection.

The developer or contractor shall give twenty-four (24) hour notice to the office of the Hamilton County Engineer's Permit/Subdivision Department prior to any construction of physical improvements, including grading/earth moving, which could effect the integrity of the roadway improvements, in order that an inspector may be assigned. The dispatcher authorized to receive such notice will record the time of the notice and the name of person and firm giving this notice. If the firm is listed on the developer's application for permit, the dispatcher will assign a confirmation number. A representative of the Hamilton County Engineer's Permit/Subdivision Department will inspect the following operations:

1. Preliminary grading: Compaction testing of embankments within the proposed right-of-way and for areas which support embankments within the right-of-way shall be performed by a certified testing firm approved by the Hamilton County Engineer. Test results shall be made known to the County inspector as work progresses, and reports/results of such tests shall be forwarded to the Hamilton County Engineer's Permit/Subdivision Department in a timely manner (ten working days). Failure of the construction testing firm to provide this information as work progresses, shall be cause for considering the work as unacceptable. Embankment Soil Compaction requirements are delineated in Section 305 of this manual. (See Appendix "G").
2. Construction of storm inlets and manholes above street subgrade level
3. Construction of collector lines and underdrains
4. Compaction with certification of ALL trenches and excavations within the right-of-way.
5. Preparation of Subgrade
6. Setting forms for rigid pavement
7. Rigid and flexible paving operations
8. Curbs/Curb and Gutters
9. Curing/protection of items utilizing Portland Cement Concrete
10. Removal of forms
11. Berm compaction
12. Sidewalks
13. Drive aprons
14. Joint sealing
15. Necessary repair work to the above

In order to coordinate the construction of these items with the Department of the Building Commissioner, Hamilton County, Ohio, a separate permit must be obtained from the Hamilton County Engineer's Permit/Subdivision Department for driveway apron and downspout outlet connection to storm inlets. Permits for and inspection of these items will be the responsibility of the maintaining jurisdiction once the public improvements are complete and the street/road has been accepted as a public street/road.

B.) NON PUBLIC STREETS

This includes streets and multi-user drives that upon completion and release of bond will not be maintained by a public agency. All materials and construction methods and procedures involved shall meet the requirements set forth in these rules and regulations as being required for public streets.

Actual inspection and certification to assure these requirements are met, shall be conducted by experienced personnel of approved testing firms. (Approved by the Hamilton County Engineer). Inspection reports and test results shall be signed and sealed by a Professional Engineer member of the testing firm who is licensed to practice in the state of Ohio. These reports shall be immediately forwarded to the Hamilton County Engineer for review as the work progresses. It is the responsibility of the developer to insure this occurs. Failure in a timely manner shall be grounds for ordering work stopped. All cost of the above including inspection, testing, certification and review is the responsibility of the developer.

C.) A representative of the Hamilton County Engineer's Bridge Department shall inspect Bridges. This will be coordinated by, and through the Permit/Subdivision Department.

D.) Representatives of the Metropolitan Sewer District will inspect the following construction operations.

1. Installation of sanitary sewers, manholes, force mains and appurtenance including bedding and backfill to subgrade elevation.

E.) Representatives of the Hamilton County Department of Public Works will inspect the following construction operations:

1. Installation of storm sewers including laterals, inlets, manholes and including bedding and backfill to street subgrade level.
2. All work involving existing streams, creeks and natural watercourses including erosion control items, retention/detention basins. Also, any revision to alignment or cross section of water courses.

F.) Representatives of the Greater Cincinnati Water Works, in areas served by the Greater Cincinnati Water Works, will inspect the following construction operations:

1. All work involved in the installation of new public water distribution/transmission lines and any Greater Cincinnati Water Works approved easements.
2. All work involving water system modification to existing public water distribution/transmission lines necessitated by proposed work for the subdivision.

G.) Installation of new or modification of existing water distribution/supply systems, in areas not served by Greater Cincinnati Water Works, will be inspected by representatives of the agency having supply and maintenance responsibility.

H.) Representatives of the Hamilton County Engineer's Permit/Subdivision Department will inspect the following construction operations:

1. Work within the right-of-way of existing County roads including ditching, grading, drive pipes, drive apron, sidewalks, downspouts and any underground work. Underground work will usually require a separate permit.

I/J.) Inspection fees: For all work listed in Section 303-A, the developer shall make an initial deposit as required in Section 301 in the minimum amount of One Thousand Dollars ($1,000.00). As work progresses and inspection proceeds, Hamilton County will withdraw monies from the deposit to cover costs of the inspection. Whenever the remainder of the deposit reduces to less than Five Hundred Dollars ($500.00), the developer will be notified and shall deposit ample funds to cover the remaining work as determined by the Subdivision Supervisor.

NOTE: See Appendix "I"

Should the amount deposited not be sufficient to cover costs of necessary inspection, the developer will be notified and required to provide additional deposits. Should the requested additional deposits not be received within ten (10) days of the request, a "Stop Work Order" will be issued and no inspections including final inspections will be scheduled until the requested additional deposits have been received.

Following street acceptance by the Board of Hamilton County Commissioners, all remaining monies on deposit in the Hamilton County Engineer's Office that were not needed to cover inspection services, will be returned to the developer. No revolving accounts will be maintained for developers by the office of the Hamilton County Engineer.

Rates charged to developers for inspection services performed are on file in the office of the Hamilton County Permit/Subdivision Department. The minimum time charged for each inspection will be one and one-half (1 1/2) hours on weekdays and two and one-half (2 1/2) hours on Saturday or Sunday. All charges will be at straight time rates.

K.) Builders installing required sidewalks and drive aprons within the public right-of-way along subdivision lot frontages for single lots shall apply for a permit covering this work. The fee for this permit is eighty dollars ($80.00) which covers both the apron and sidewalk inspections.

Builders installing drive aprons and necessary sidewalk within the public right-of-way which will serve private multi lot streets and/or private drives shall apply for a permit covering this work. The apron shall be constructed to commercial apron standards (see section 204). The fee for this permit is two hundred and forty dollars ($240.00) which covers inspection of the drive apron and sidewalk (within the public right-of-way).

The Hamilton County Engineer reserves the right to order additional tests or to order items removed and replaced in cases when work was performed without notification for inspection, or not performed in accordance with the specifications.

Note: Hamilton County Engineer's inspectors are not authorized to inspect subdivision work in the absence of an approved plan and an approved developer's application.

304 TESTING

All material supplied shall be plant inspected by an independent, certified testing laboratory at no cost to the County (See Appendix “G”).

Tests on Asphalt Concrete shall include bitumen content and sieve analysis and are required when daily production exceeds twenty-five (25) Cu. Yds.

The developer shall employ an independent, certified testing laboratory to perform on-site tests on Portland Cement Concrete. Such tests shall evaluate representative concrete as placed within the forms and shall include air content, slump and yield, and are required when daily production exceeds twenty-five (25) cubic yards. For street paving, testing shall be performed on the first load produced each day and thereafter for each one hundred (100) cubic yards, increment, or fraction thereof.

Compaction tests shall be made in fill areas in the right-of-way, on embankment supporting the roadway, and on the subgrade immediately prior to paving operations. These tests shall be performed and results determined by a certified testing firm approved by the Hamilton County Engineer, and employed by the developer. If the results of the tests prove unsatisfactory, additional working of the soils (aeration, compaction, replacement, etc.) will be performed by the contractor and tests will be made until minimum requirements have been met.

The number of embankments and/or subgrade tests and spacing thereof shall be at the discretion of the inspector and shall depend upon uniformity of soils, type and conditions of soils, and uniformity of, and extent of the contractor’s operations. In general spacing of subgrade tests should not exceed two hundred feet (200'). Particular attention shall be given to subgrade supporting curb and gutter.

The Hamilton County Engineer reserves the right to order pavement cores taken and analyzed by a certified testing laboratory employed by the developer should conditions warrant such action.

305 EMBANKMENT

An embankment consists of soil, granular material, shale, rock or random material, constructed in layers to predetermined elevation and cross section.

Embankment construction shall consist of preparation of the areas upon which embankments are to be placed; the placing and compacting of approved material within roadway areas where unsuitable material has been removed; and the placing and compacting of embankment materials in holes, pits, and other depressions within the roadway area. Only approved materials shall be used in the construction of embankments and backfills. Frozen material shall not be placed in the embankment, nor shall embankment be placed on frozen materials.

Soil is suitable for use in embankment provided it has the following characteristics: Maximum laboratory dry weight shall be not less than ninety (90) pounds per cubic foot, except that soils having maximum dry weights of less that one hundred-two (102) pounds per cubic foot, shall not be used in the top twelve inches (12") of the embankment or permitted at subgrade.

Between the dates of May 1 and November 1, soil in the area to be excavated for which the moisture content exceeds optimum for that soil by eight percent (8%) or more, shall be considered unsuitable for use in embankment, except that such wet soil, if suitable when drier, may be dried and used in embankment if the contractor so elects. The foregoing provision shall not apply to surface soil, which has become temporarily wet because of failure of the contractor to maintain adequate drainage as required. Moisture content shall be determined by thoroughly drying a soil sample from the excavation area and computing the moisture as follows:

$$\text{Percent moisture equals} = \frac{\text{Weight of water in the sample X 100}}{\text{Dry weight of the sample}}$$

All embankments, except rock embankments, shall be constructed using moisture and density control. All subgrade, except rock and shale in cut sections, shall be constructed using moisture and density control (see Appendix "G").

Embankment and subgrade material, which does not contain sufficient moisture to be compacted, shall be sprinkled with water. Water shall be applied by means of trucks equipped with suitable sprinkling devices and shall be thoroughly incorporated into the material, which is to be compacted by means of discs or other approved equipment. Embankment and subgrade material containing excessive moisture shall be required to dry prior to or during compaction to a moisture content, not greater than three percent (3%) above optimum, except that for material which displays pronounced elasticity or deformation under the action of loaded rubber tired construction equipment, the moisture content shall be reduced to optimum, if necessary, to secure stability. For subgrade material, these requirements for maximum moisture shall apply at the time of compaction of the subgrade and also at the time of placing pavement or base. Drying of wet soil shall be expedited by the use of plows, discs, or by other approved methods.

Soil embankment shall be placed and compacted in layers until the density is not less than the percentage of maximum dry density determined by AASHTO T99, as indicated in the following table:

EMBANKMENT SOIL COMPACTION

MAXIMUM LABORATORY DRY WEIGHT (Pounds/Cu.Ft.)	MINIMUM COMPACTION* REQUIRED Percent Laboratory Maximum
90-104.9	102%
105-119.9	100%
120 and over	98%

All soil in subgrade (top 12 inches) shall have a minimum laboratory dry weight of 102 lbs/cu.ft.

*See Section 307 for subgrade compaction requirements.

306 BACKFILLING OF TRENCHES

Excavations for structures, manholes, catch basins, flush holes, water valve chambers etcetera, which are not located within the existing or proposed street pavement area, shall be backfilled with granular material compacted in layers. In such cases, a one inch (1") maximum diameter weep hole, formed by tubing, shall be cast into the base of storm manholes and catch basins to provide drainage for water that may accumulate in the granular material. The backfilling shall consist of furnishing, transporting, placing and compacting in layers, porous granular aggregate meeting ODOT Standards for backfill material, from the bottom of the excavation, up to an elevation twelve inches (12") below the final grade line or cross section of the subgrade, as shown on the approved plan. The stability at subgrade (12" thickness) must be equal to that immediately adjacent to the excavation. Incorporation of additional material such as soil fines, crushed stone, CLSM-CDF and so forth, may be necessary to achieve this requirement. For other subgrade requirements refer to Section 307 Preparation of Subgrade.

All mainline and lateral trenches between the pavement limits and for backfill of excavations for manholes, catch basins, flush holes, water valve chambers, etc. which are located under the pavement, shall be backfilled with Controlled Low Strength Material-Controlled Density Fill (CLSM-CDF) as described in Addendum "A" of the Hamilton County Engineer's Permit Manual.

As an alternate to the requirements described in the previous paragraph, excavation, bedding and backfill for all lateral trenches between pavement limits and for backfill of excavations for manholes, catch basins, flush holes, water valve chambers, etc. which are located wholly or in part under the pavement, shall be done in accordance with sections 603.05, 603.06 and 603.10 of the ODOT Construction and Materials Specifications (C&MS) The final twelve inches (12") shall be compacted in accordance with Section 307 of this manual. **Density tests shall be performed and certification shall be provided by an approved geotechnical firm, documenting that the backfill was so placed and including actual satisfactory test results for the compacted layers.**

All trench backfill, other than for mainline and lateral trenches (see paragraph two, this section), within the right-of-way and/or utility easements adjacent and parallel thereto shall be compacted in layers to achieve a density of not less than ninety-five percent (95%) (and to subgrade requirements at subgrade level). Compaction tests shall be made by a certified testing firm, approved by the Hamilton County Engineer and employed by the developer (See Appendix "G"). In trench locations or excavation for structures where the use of controlled low strength material-controlled density fill (CLSM-CDF) is not required, it can be used as an alternate backfill material, in which case the requirements for compaction testing will be waived.

307 PREPARATION OF SUBGRADE

Soil subgrade shall be prepared in accordance with 305 Embankment. Soils with a maximum dry weight of less than one hundred-two (102) pounds per cubic foot are considered unsuitable for subgrade, and when encountered in the upper twelve inches (12") of the subgrade shall be replaced with suitable soils or other approved materials. Subgrades containing soils between one hundred-two (102) and one hundred-five (105) pounds maximum dry weight shall be compacted to not less than one hundred-two percent (102%). Subgrade soils over one hundred-five (105) pound maximum dry weight, shall be compacted to not less than one hundred percent (100%) at maximum dry density as determined by AASHTO T99, Method A.

"Grade Stakes" shall be provided and placed at twenty-five foot (25') maximum longitudinal spacing. The following information shall be placed on the grade stakes: Station, Offset, Top of Curb and/or Subgrade Cuts. This information shall be placed in such a manner as to permit convenient checks by string lining.

The subgrade shall be brought to the proper grade and cross section by diligent and frequent checks of the grade stakes. Prior to inspection the subgrade shall be trimmed by use of a motor grader. Where curb and gutters are used on both sides of the pavement, a pin template, spanning from gutter plate to gutter plate, shall be used. In rigid pavement construction, the pin template shall span from form to form. The pin template shall be constructed of metal with pins, at twelve inch (12") maximum spacing, capable of adjustment to the design cross slope of the subgrade. In lieu of the requirements for a pin template, use of a motor grader with blade controlled by laser beam may be permitted.

When soft subgrade is encountered, in which satisfactory stability cannot be obtained by moisture control and compaction, the condition shall be corrected to the satisfaction of the Hamilton County Engineer. Proof rolling shall be required on all pavement subgrade, prior to placing of any base material. Any irregularities or failures shall be corrected as directed by the Hamilton County Engineer. Proof rolling shall consist of a minimum of two complete coverage's with a maximum legally loaded tandem axle dump truck.

The surface of the subgrade shall be maintained in a smooth condition to prevent ponding of water after rains, and ditches and/or other outlets, shall be constructed and maintained where possible to insure the thorough drainage of subgrade surface at all times.

Any repair work necessary to the rigid or flexible pavement and/or subgrade after any of the various courses of pavement have been placed and/or within the maintenance period as described in Section 406 and which requires the removal of soft or unsatisfactory subgrade material, shall include the use of Controlled Low Strength Material-Controlled Density Fill (CLSM-CDF) to replace all subgrade removed. Details of this material are included in Addendum "A" of the Hamilton County Engineer's Permit Manual.

308 RIGID PAVEMENT

A.) Subgrade:
Shall be prepared as outlined in Section 307 above.

B.) Subdivision Standard Drawings:
Concrete pavement in residential subdivision shall be seven inches (7") plain concrete and in all other subdivisions shall be eight inches (8") reinforced concrete as per Subdivision Standard Drawings No. 1 and No. 2. Class "C" Concrete shall be used except that modifications approved by and on file in the office of the Hamilton County Engineer may be permitted upon written request of the developer.

C.) Forms:

1. Equipment: Side forms shall be of steel, straight and of a depth equal to the thickness of the pavement at its edge. The use of bent or damaged side forms or forms with damaged joint locks or pin pockets shall not be permitted. All forms shall be cleaned and oiled each time they are used. They shall be furnished in sections of not less than ten feet (10') in length, with horizontal joint and a base width equal to the depth of the forms. Flexible or curved forms shall be of a design acceptable to the Hamilton County Construction Supervisor and shall be used for construction of circular pavement edges where the radius is one hundred feet (100') or less. Forms shall be provided with adequate devices for secure setting, so that when in place they will withstand the operation of the paving equipment. The forms shall contain adequate joint locks for joining the ends of abutting form sections tightly together.

2. Setting Forms:
All forms shall be set with reasonable conformance to the required grade and alignment and be supported on thoroughly compacted material for their entire length during the entire operations of placing and finishing the concrete. After the setting of side forms, the top face of the form shall not vary from a true plane more than one-fourth inch (1/4") in ten feet (10') and the vertical face shall not vary more than one-fourth inch (1/4") in ten feet (10'). The contractor shall test the forms and resetting the forms shall eliminate variations from the above requirements. Shimming the loose earth, stones, etc., will not be permitted. The alignment and grade of all forms set should be approved before and immediately prior to the placing of the concrete.

D.) Slip Form Paving:
Concrete pavement may be placed in a single lane, utilizing the slip form method, with the permission of the County Engineer. Slip form pavement procedures when used, shall generally conform to the requirements of ODOT-C&MS Item 451.03 b. Particular attention must be given to line and grade preparation.

E.) Joints:

1. Longitudinal Joints: These joints are placed between adjacent lanes of pavement to control cracking in the longitudinal direction. Keyways shall not be used at longitudinal joints. Five-eighth inch (5/8") diameter hook bolts or "L" Bolts are required to tie the adjacent lanes together. Hook bolts shall not be oiled and shall be installed in accordance with ODOT-Standard Drawing BP-2.1 and Subdivision Standard Drawing No. 3.

2. Transverse Joints:

   a. Impressed: These joints are placed at maximum spacing of fifteen feet (15') measured along the street centerline. The joints shall be a minimum of two and one-fourth inch (2-1/4") deep by one-quarter inch (1/4") wide and may be formed by use of an approved edging tool, or by use of two and one-fourth inch by one-eight inch (2-1/4" x 1/8") pre-molded joint material. With permission of the County Engineer, the transverse joints may be saw-cut, to the same dimensions as impressed joints. Care shall be exercised to insure that the joints are straight.

   b. Expansion: These joints are placed to provide relief from expansion stress. Non-extruding compressible material is to be installed in a dowel support assembly at the design location of the joint. The basket shall be set on uniformly shaped subgrade in such a way that it is supported at all points of its base. The expansion material shall be straight and set perpendicular to the profile grade and perpendicular to the street centerline. The expansion material shall extend to the subgrade and to the forms on each side. Particular attention must be paid to maintaining the alignment of the dowels to insure that they are parallel to each other, to the profile grade and to the centerline of the street. Baskets shall be adequately staked to insure this. The contractors operation shall be carried out in such a way that the expansion assembly, once properly set in place, is not disturbed.

      Dowels shall be eighteen inches (18") in length, round, smooth straight steel bars, one inch (1") in diameter, spaced twelve inches (12") on center, beginning six inches (6") from the longitudinal joints. The "free" end of the dowel shall be coated with bond breaker such as SAE 140 Oil and shall then be equipped with a metal sleeve approximately three inches (3") long, so as to provide for one inch (1") dowel movement.

      For other details, refer to ODOT-Standard Drawing BP-2.2, dated 1/1/93 or current revisions thereto.

The top of the expansion material shall be one inch (1") below the surface of the pavement and the slot sealed with an asphalt base liquid sealing compound prior to opening the pavement to traffic including construction traffic.

c. Construction: These joints are placed at the end of each day's pour or when production is interrupted for more than thirty (30) minutes. The joints shall be formed by use of a two inch (2") minimum thickness wood bulkhead, with holes at mid-depth and spaced at twelve inch (12") intervals for installation of eighteen inch by one inch (18" x 1") dowel bars. The dowels shall be clean and free of oil or other substance that would prevent bond between steel and concrete.

F.) Placing Concrete:

The subgrade shall be sprinkled with water and in a thoroughly moistened condition prior to placement of the concrete.

The concrete when placed upon the subgrade shall have a nominal slump of one to three inches (1" to 3"). In no case shall concrete be placed with slumps exceeding the maximum. Should this occur, the Hamilton County Engineer reserves the right to order cores taken by an independent certified testing laboratory and/or to order the involved pavement removed and replaced.

Special care shall be exercised when depositing concrete around expansion and construction joints to avoid disturbing the dowels or damaging the expansion material. Concrete at this location shall be consolidated by means of internal vibration.

A mechanical self-propelled spreading and finishing machine shall be used when the length of street involved within the subdivision block exceeds four hundred (400) Lin. Ft. The minimum screed width for single screed machines shall be eighteen inches (18"). The contractor shall make such checks and adjustments to the screed as are necessary to insure a true surface, both longitudinal and transversely.

Vibrating screeds, when permitted for irregular areas such as cul-de-sacs or as permitted by these specifications, shall transmit internal vibration throughout the pavement thickness and not just the surface.

During the operation of the finishing machine or vibrating screed, where permitted by these specifications, a uniform roll of concrete shall be maintained ahead of the screed for its entire length.

G.) Final Finishing:

1. Straight Edging: After the mechanical finishing, while the concrete is still plastic, long handled floats may be used to smooth and fill in open textured areas in the surface; but this must be done before straight edge finishing. The use of such floats shall be held to a minimum. No water is to be added to the surface during this or any other operation. After the floating has been completed and while the concrete is still plastic, the surface of the concrete shall be tested for trueness with ten feet (10') straight edges. Any variance of one-fourth inch (1/4") in ten feet or more shall be corrected. If floats are used to smooth and fill in open textured areas, they shall precede the straight edging procedure. Before the concrete has taken its initial set, the edges of the pavement along each slab, and on each side of transverse joints, shall be worked with an approved tool and rounded to the radius specified.

2. Texturing: When most of the water sheen has disappeared, but before the concrete becomes non-plastic, the final texture should be applied. Thus, final finishing is acquired by use of a stiff bristled wire or straw broom, which leaves the surface with a gritty, nonskid surface transversely from the centerline of the pavement to the edge of the gutter plate. It is important to keep the bristles clean of excess laitance.

H.) Surface Smoothness:

Following final curing of the concrete, the Hamilton County Engineer's Office will test drive the pavement and if in their opinion surface tolerances of one-fourth inch (1/4") in ten feet (10') was not maintained, the contractor shall cause the pavement surface to be tested by a surface testing device. This device shall be provided and operated by an independent certified testing agency. Testing and correction shall be as outlined in ODOT-C&MS Item 451.12 - Surface Smoothness. Necessary corrections shall be made as appropriate.

I/J.) Integral Concrete Curb:

Concrete curbs for subdivision streets shall meet the specifications as shown of Standard Drawing No. 1. Contractors are advised to obtain a wood template for checking conformance to curb standards. Joints of the type used in the pavement shall be constructed in the curb and spaced identically with the joints in the pavement. A self-propelled machine may be used for placing of concrete curb on concrete pavement. The mold or shoe must conform to the proper cross section shown on Standard Drawing No. 1. Concrete for integral curb shall be placed upon the previously poured slab while the slab concrete is still fully plastic and prior to initial set. Approved flexible forms of steel or wood may be used for construction of the curb where the radius is less than one hundred feet (100').

K.) Curing:

Curing should begin as soon as the texturing process is completed providing that the finished pavement does not have free water on the surface. White pigmented membrane materials meeting the specification requirements of ODOT Item 451 shall be applied at the rate of one gallon per one hundred fifty (150) square feet. Care shall be exercised to make sure that the specified rate of applications is adhered to and the curing compound is applied evenly so that a uniformed thickness of membrane is obtained.

L.) Form Removal:

Forms shall not be removed until the concrete has attained sufficient strength to prevent damage to the concrete surface or breaking of the edges during form removal. When forms have been removed, all honeycomb areas shall be filled with mortar and cured. Joints shall be checked to make sure the ends are cut through the edges and no concrete is left in the grooves or around joint materials. Curing shall be applied to edges just as soon as forms have been removed and patching and cleaning of joint ends has been completed. Backfill in the berm area shall be made and compacted within seven days after removal of forms and curing.

M.) Sealing Operation:

Joint walls must be dry and thoroughly clean. When liquid compounds are used, pouring should be done in such a manner that complete filling from the bottom of the joint slot to approximately level with the surface of the pavement, is assured.

N.) Admixtures:

Water reducing, set retarding admixtures as listed in ODOT-C&MS Item 705.12 (2005 or current edition) may be used in concrete by permission of the Hamilton County Engineer. Requests for use of admixtures which involve reduction of cement content must be made in writing and include full details of admixtures proposed, the proportions involved, and the intended use and the limits of use due to time or weather.

O.) Weather Limitations:

After November 1, the following policy will be in effect, as related to concrete paving. The subgrade must be frost-free and must meet the same requirements as outlined in Section 307. Sufficient straw and plastic sheeting to cover the proposed pavement pour to a depth of twelve inches (12") must be evident on the site.

A minimum air temperature at the site of thirty-six degrees F. (36°) and a U.S. Weather Bureau prediction of day time temperature of forty degrees F. (40°) or more for the next twenty-four (24) hours will be cause for the independent certified testing laboratory inspector to release concrete from the plant.

309 FLEXIBLE PAVEMENT

A.) Subgrade shall be prepared as outlined in Section 307.

B.) Combination Concrete Curb and Gutter:

1. Concrete shall meet the same requirements as Section 308.
2. Forms shall meet the same requirements as Section 308, except as noted below.
3. Details as included on Standard Drawing No. 1 shall be adhered to.
4. Slip form, self-propelled mechanical pavers may be used. Maximum joint spacing shall be ten (10) Lin. Ft. The contractor may use No. 8 Aggregate in lieu of No. 57 in the Class "C" Concrete, when extrusion type slip form curb machines are used.
5. One-inch (1") non-extruding expansion joints with two (2) one inch (1") smooth round dowels, shall be placed at both ends at catch basin block outs and at the beginning and end of all radii and at construction joints. Requirements for placing expansion joints shall generally follow Section 308.
6. Contraction joints, either manually impressed or saw-cut, shall be placed at ten feet (10') intervals. Depth of joint shall be two inches (2") minimum.
7. Finishing, Curing and protecting shall be as required in Section 308.

C.) Bases:

1. Aggregate Base (ODOT Item 304): This work shall consist of furnishing, placing and compacting one or more courses of aggregate base material on a prepared subgrade, in reasonably close conformity with the lines, grade, thickness and typical section as shown on the Improvement plans. The allowable surface smoothness tolerance shall be one-half inch (1/2") in the ten feet (10').

   The aggregate base material (304) shall have a moisture content at or near optimum, as determined by the engineer at the time of loading for hauling to the work site. If the moisture content is below optimum, when delivered to the work site, water shall be added, as the material is being spread, to bring the water content to optimum.

   The aggregate base shall be constructed in two (2); three inch (3") uniform compacted courses. Each course shall be compacted with a type II pneumatic tired roller, or ten (10) ton three-wheel roller. When vibration rollers are used in addition to the other two rollers noted above, the aggregate base may be constructed in one (1) six inch (6") compacted course.

2. Asphalt Concrete Base (ODOT Item 302 as modified)* This work shall consist of constructing a base course of aggregate and bituminous material, mixed in a central plant and spread and compacted on a prepared base surface. The maximum compacted depth shall be six inches (6") for each lift. However, vibratory rollers shall be included as part of rolling equipment whenever the course thickness is greater than three inches (3"). The variation of the surface from the testing edge of the ten feet (10') straight edge shall not exceed one-half inch (1/2").

*Refer to note at Section 309G paragraph one, for modifications to ODOT C&MS Specifications, which shall govern.

Compaction of the material shall be obtained by using a combination of both steel wheel and Type I pneumatic tired roller, except in small areas when the Hamilton County Engineer's representative shall approve compaction methods. Refer to ODOT-C&MS Item 401.13 for roller compaction. The finished surface of this bituminous aggregate base course shall be one and one-half inch (1-1/2") below the gutter plate. The edges along the gutter plates shall be sealed before traffic is permitted to use the pavement.

D.) Intermediate Course (Type #2 Flexible Pavement):
This course shall consist of one (1) one and one half inch (1 ½") course of compacted asphalt concrete, constructed on a prepared asphalt concrete base (302 as modified)* in conformance with the line, grades and typical sections shown on the Subdivision Improvement Plans. The course shall be produced and constructed in conformance with the provisions of the ODOT-C&MS Item 448, expect as may be modified by the Hamilton County Engineer for paving roads and streets within this jurisdiction. Copies of such modifications are on file in the Hamilton County Engineer's Construction Office.

The one and one half (1 ½") intermediate course shall be installed immediately following of the 302 Asphalt Concrete Base. The surface of the complete intermediate course shall be finished one inch (1"), uniformly, below the top edge grade of the concrete gutter plate.

E.) Intermediate Course (Type 3 Flexible Pavement):
This course shall consist of one (1) one and one half (1 ½") course of compacted asphalt concrete, constructed on a prepared base of asphalt concrete base (302 as modified)* in conformance with the line, grades and typical sections shown on the Subdivision Improvement Plans. The course shall be produced and constructed in with the provisions of the ODOT-C&MS Item 448, except as may be modified by the Hamilton County Engineer for paving on roads and any streets within this jurisdiction. Copies of such modifications are on file in the Hamilton County Engineer's Construction Office.

The one and one half (1 ½") intermediate course shall be installed immediately following completion of the 302 Asphalt Concrete Base. The surface of the completed intermediate course shall be finished one inch (1") uniformly below the edge grade of the concrete gutter plate.

F.) Surface Course:

This work shall consist (for both type #2 and Type #3 Flexible Pavement) of one (1) one and one half (1 ½") course of compacted asphalt concrete (448) constructed on the prepared surface of the asphalt concrete intermediate course, in conformity with the lines, grade, and typical sections shown on the subdivision improvement plans. The course shall be produced and constructed the ODOT-C&MS Item 448, except as modified by the Hamilton County Engineer for paving roads and streets in this jurisdiction. Copies of the modification and on file in the Hamilton County Engineer Construction Office.

The one and one half-inch (1 ½") surface course for both Type #2 and Type #3 Flexible Pavement shall be placed less than not nine (9) months after completion of the intermediate course. Any variation in the transverse and longitudinal surface tolerance [one-quarter inch (1/4") in ten feet (10')] or the intermediate course surface shall be connected to prior to placement of the one-inch (1") surface course. Following necessary connection (if any) or the surface or the intermediate course, it shall be thoroughly cleaned by use of a power broom, using water if necessary. Any dust and moisture resulting from this operation shall be eliminated and then a tack coat should be uniformly applied over the surface in accordance with ODOT-C&MS Spec. 407. Vertical faces or all casting, utility boxes, curbs, gutters etc. against which the surface course is to be 20 placed, shall be painted on sealed with an asphalt based liquid material.

For Type #2 Flexible Pavement, a one-inch (1") course shall be installed immediately following placement of the asphalt concrete base. The surface of this course shall be finished one half inch (1/2") below the edge grade of the concrete gutter plate.

The top one and one half inch (1 ½") course shall be placed not less than nine (9) months after the previous course. 448 shall be thoroughly cleaned with a power broom using water, if necessary. Any variation from specified transverse and longitudinal slopes shall be corrected. A tack coat is then applied to the area to be covered. The tack coat shall conform to ODOT - C&MS Item 407. Faces of all castings, curbs, gutters, etc. against which the surface course is to be placed; shall be first painted or sealed with an asphalt based liquid material.

The asphalt mixture shall be placed uniformly high at all contact surfaces of curbs, gutters, manholes, and similar structures, so that after compaction, it will be a minimum of one-half inch (1/2") above the edge of such structures.

Immediately after the course is screeded, and before compaction is started, the surface shall be checked, and inequalities adjusted. A rake shall remove all droppings, i.e., fat sandy accumulations from the screed and all fat spots in the mixture shall be removed and replaced with satisfactory material.

After spreading, the mixture shall be thoroughly and uniformly compacted to a thickness of one and one half inch (1 ½").

The finished wearing course shall not vary more than one-half inch (1/2") from the cross section of the course, nor more than one-fourth inch (1/4") from a ten feet (10') straight edge applied to the surface parallel to the centerline of the pavement.

In general, one tandem roller (8-10 tons) and one three-wheeled roller (8-10 tons) shall be required throughout the construction of the surface course. The number of rollers shall be sufficient to obtain compaction at a rate not less than the rate of placing and spreading without exceeding the total capacity of the rollers. Capacities of the various rollers shall be as listed in ODOT-C&MS Item 401.13

Projects requiring one hundred (100) tons or less of surface material may be constructed by the use of one tandem roller (8-10 tons). To prevent the adhesion of bituminous materials, the wheels of the rollers shall be kept moist for the full width, but excess water will not be permitted.

In the event of unusual circumstances or conditions the developer may request permission of the Hamilton County Permit/Subdivision Engineer for a variance to the methods described above. This request shall be in writing.

Upon completion of the surface course, the edges shall be sealed with a bituminous liquid. Manholes valve chambers, catch basins, castings, etc., **shall not** be surface sealed.

The contractor shall follow the provisions of ODOT-C&MS Specifications regarding hauling.

G.) Approach to Subdivisions:

Approaches or entrances to new concrete subdivision streets off County roads with flexible pavements shall be constructed as follows:

1. Subgrade shall be prepared as outlined in Section 307.
2. Total thickness shall equal thickness of the existing County road including base materials, but in no case less than eight inches (8") for residential or thirteen inches (13") for non-residential subdivisions.

3. Developer/contractor may use either Aggregate Base Material (304) or Asphalt Concrete Base Material (302 as modified)* for areas beneath the eight inch (8") or thirteen inch (13") thickness noted in (2.) above.
4. For residential subdivisions, a six-inch (6") course of Asphalt Concrete Base (302 as modified)* shall be placed and compacted. For non-residential subdivisions, a six-inch (6") course of (302 as modified)* shall be placed and compacted followed by a five-inch (5") course of compacted Asphalt Concrete Base (302 as modified)*.
5. A two-inch (2") surface course of 448 Material shall be placed immediately upon completion of the (302 as modified)* Base.
6. A curb of the type used in the subdivision shall be constructed from the right-of-way line, around the radius to a point eight feet (8') from the edge of a non-curbed county or township roadway pavement. If the county or township roadway is curbed, the proposed curb shall be connected to the existing curb. A transition in height shall occur in the outer four feet (4') of the curb. Drainage of the roadway area must be maintained.

*NOTE: 302 as modified requires that all provisions of ODOT 302 shall apply except that the aggregate composition in 301 shall be substituted.

310 DRIVEWAYS

Concrete driveway approaches (aprons) within the public right-of-way shall be constructed in accordance with the minimum thickness described in sections 204A and 204B of these regulations and shall have one-half inch (1/2”) minimum thickness preformed expansion joint material placed full depth at the back of the curb and for the full width of the drive apron (at back of curb). When the sidewalk portion of the apron is placed in the same operation with the other portions, an impressed joint with a minimum depth of one inch (1”) shall be installed along the front face line of the sidewalk to delineate the sidewalk area. Subgrade for the drive apron shall consist of suitable soil and compacted with a mechanical compactor. Concrete for the apron shall meet the requirements of section 308 of these regulations.

For drive apron details see Standard Drawing No. 15.
For driveway location refer to Section 204-C.

311 SIDEWALKS

One-course concrete sidewalks, along interior residential subdivision streets, four feet (4') wide and four inches (4") thick, shall be constructed upon a mechanically compacted soil subgrade. Granular materials shall not be used for subgrade purposes. Full depth forms shall be used for all sidewalks. One half-inch (1/2") full depth expansion joints shall be installed where sidewalks abut curbs, drive aprons and driveways. A one-inch (1") deep-tooled joint shall be placed transversely at five foot (5') maximum intervals. Concrete shall meet the requirements of Section 308 of these Subdivision Rules and Regulations. (See Section 205 for thickness requirements for sidewalks along frontage subdivisions, commercial subdivisions and within drive apron limits).

TABLE OF CONTENTS

ARTICLE IV REVIEW AND APPROVAL

401 Engineering Review/Approval of Subdivision Plans
- **A.) Hamilton County Engineer Reviews**
- **B.) Hamilton County Public Works Review**
- **C.) Greater Cincinnati Water Works Review (or appropriate agency in areas not served by G. C.W.W.)**
- **D.) Metropolitan Sewer Department Review**
- **E.) Hamilton County Soil and Water Conservation Review**
- **F.) Hamilton County Board of Health**
- **G.) Corrections**
- **H.) Revisions**
- **I/J.) Notification**
- **K.) Regional Planning Commission**
- **L.) Public Works Approval**
- **M.) Metropolitan Sewer Dept. Approval**
- **N.) Hamilton County Engineer Approval**
- **O.) Additional Plans Submitted**
- **P.) Distribution of Plans**
- **Q.) Plans Forwarded to Hamilton County Permit/Subdivision Department**

402 Construction
- **A.) Applies for necessary permits**
- **B.) Appropriate Fees**

403 Recording Subdivision Record Plat and Posting Surety
- **A.) Distribution of Record Plat**
- **B.) Boundary Closure**
- **C.) Amount of Surety**
- **D.) Performance Contract and Surety**
- **E.) Notification to Regional Planning Commission**
- **F.) Recording Record Plat**

404 Pre-Final and Final Inspection

405 Acceptance and Release or Surety
- **A.) Field verification of monumentation**
- **B.) Maintenance Surety and Maintenance Contract**
- **C.) Street Acceptance**
- **D.) Performance Surety Release**

406 Maintenance Surety Release

407 Acceptance without Surety

ARTICLE IV
REVIEW AND APPROVAL

401 ENGINEERING REVIEW/APPROVAL OF SUBDIVISION PLANS

Upon receipt from the developer of Improvement Plans for a proposed subdivision, the Regional Planning Commission distributes copies of the plan to each of the following: the Hamilton County Engineer, the Hamilton County Department of Public Works (Sanitary Engineer), the Greater Cincinnati Water Works, The Hamilton County Soil and Water Conservation District, The Metropolitan Sewer District and/or The Hamilton County General Health District.

A.) The office of the Hamilton County Engineer reviews streets, grades, typical sections, bridges, etc. within the Public Right-Of-Way to insure compliance with public street standards. Contact is established with the developer's engineer to resolve questions that may arise (see Section 107 for required fee).

The office of the Hamilton County Engineer also reviews the details for non-public streets and private drives regarding compliances to standards and recommends in writing to staff of H.C.R.P.C. the acceptability of the plan or any items needing correction. These recommendations shall become a part of the record of the subdivision.

B.) The office of the Hamilton County Department of Public Works reviews storm sewers and appurtenances, headwalls, detention/retention basins, erosion control and involvement of the planned work with existing and proposed water courses, etc., and establishes contact with the developer's engineer should questions arise. Also, reviewed are water distribution/supply improvements for locations not served by Cincinnati Water Works.

C.) The Greater Cincinnati Water Works (or appropriate agency in areas not served by Greater Cincinnati Water Works) reviews the planned water main system including appurtenances and its compatibility with existing and/or proposed distribution systems in the vicinity. Contact is established with the developer's engineer should questions arise.

D.) The Metropolitan Sewer District reviews the planned sanitary sewer system within the subdivision including manholes and appurtenances, the connections to existing facilities and compatibility with future system improvements and easements. Contact is made with the developer's engineer should questions arise.

E.) The Hamilton County Soil and Water Conservation District reviews the plan to determine if required erosion control devices and provisions (both temporary and permanent) are included.

F.) In situations where all or part of the proposed subdivision cannot be served by public sanitary sewer systems, as determined by the Metropolitan Sewer District, the latter agency so notifies the Regional Planning Commission, who refers the matter to the Hamilton County Board of Health. The staff of the Hamilton County General Health District will review the proposed sanitary disposal systems and establish contact with the developer's engineer.

G.) The offices listed above send a copy of the subdivision plan, marked with needed corrections, to the developer's engineer.

H.) The developer's engineer coordinates the comments/corrections noted above, makes necessary revisions to the subdivision plans and returns them to the offices requiring revisions.

I/J.) Upon satisfactory review, each involved office notifies the Regional Planning Commission in writing.

K.) Upon receipt of the affirmative reports by the Regional Planning Commission's staff, four sets of revised Subdivision Improvement Plans are sent to the Hamilton County Department of Public Works.

L.) The Hamilton County Department of Public Works reviews and places an approval stamp on all copies of the plans, which are then forwarded to the Metropolitan Sewer District.

M.) The Metropolitan Sewer District reviews and places an approval stamp on all copies of the plans, which are then forwarded to the office of the Hamilton County Engineer.

N.) The office of the Hamilton County Engineer reviews and places an approval stamp on all copies of the plans which are then forwarded to the Regional Planning Commission.

O.) Upon receipt of all plans with approval stamps, the Commission's staff requests the developer's engineer to submit additional sets of plans.

P.) The Regional Planning Commission staff stamps approval on each set of plans and distributes them to the various agencies involved.

Q.) Four stamped sets of the approved subdivision plans are forwarded to the Hamilton County Engineer's Permit/Subdivision Department.

402 CONSTRUCTION

Upon receipt from the Regional Planning Commission of notice of approval of Subdivision Improvement Plans, and copies of the plans with proper stamps thereon, the developer proceeds as follows:

A.) Makes contact with the various inspection agencies (Greater Cincinnati Water Works, Hamilton County Department of Public Works, The Hamilton County Soil and Water Conservation District, Metropolitan Sewer District, Hamilton County Board of Health, Office of the Hamilton County Engineer, etc.) and applies for any necessary permits to commence construction, including arranging for necessary inspection fees

B.) Applies for the Hamilton County Engineer's Construction Permit. Refer to Sections 301-A and 303-G for details and fee information

403 RECORDING SUBDIVISION RECORD PLAT AND POSTING SURETY

Before any lot is sold within an approved subdivision the following shall occur;

A.) The Regional Planning Commission's staff reviews copies of the Subdivision Record Plat prepared by an Ohio Professional Registered Surveyor. They then submit copies to the Office of the Hamilton County Engineer, the Metropolitan Sewer District and the Hamilton County Department of Public Works, for their review. These agencies establish contact with the Developer's Engineer/Surveyor if revisions or corrections are necessary.

B.) The Hamilton County Engineer's Permit/Subdivision Department submits a copy of the Subdivision Record Plat to the Hamilton County Engineer's Tax Map Department for review and approval of the boundary closure.

C.) The Hamilton County Engineer's Permit/Subdivision Department, along with the Metropolitan Sewer District and the Hamilton County Department of Public Works, make a cost determination of the physical improvements to be completed. Based on written reports from these agencies, the Hamilton County Engineer's Permit/Subdivision Department determines the total amount of surety needed and notifies the developer. The total amount of surety required shall include an estimate of cost necessary to act in lieu of a maintenance surety should the developer fail to provide same.

D.) The developer delivers a performance contract and surety to the Hamilton County Engineer's Permit/Subdivision Department (See Appendices "A","B" and "C"). This contract and surety shall contain a provision that the surety will extend to include maintenance should the developer, for any reason, fail to provide a maintenance surety and contract as required in section 405 of these rules and regulations.

E.) After reviewing the surety and performance contract, the Hamilton County Engineer's Permit/Subdivision Department gives written notification to the Regional Planning Commission that the remaining subdivision work is adequately bonded.

F.) The Regional Planning Commission obtains the proper signatures and releases the record plat to the developer for recording.

404 PRE-FINAL AND FINAL INSPECTIONS

The Metropolitan Sewer District of Greater Cincinnati will perform final inspection of all sanitary sewers and sewer appurtenances involved with the subdivision.

The Hamilton County Department of Public Works will perform final inspection of the public storm sewer systems, including inlets and manholes below subgrade level, storm sewer outlets to existing streams and watercourses including headwalls, erosion control features, retention and detention basins.

The Greater Cincinnati Water Works will perform final inspection of all water mains and appurtenances involved with the subdivision (in areas served by Greater Cincinnati Water Works). Water main improvements in areas not served by Greater Cincinnati Water Works are to be inspected by the appropriate water supplier.

The Hamilton County Bridge Engineer will perform final inspection of structures and bridges. Any bridge, culvert, pipe or box with a span of ten (10') feet or larger, is considered a bridge in this context.

The Hamilton County Engineer's Permit/Subdivision Project Inspector will perform an inspection of all street and surface work within the street right-of-way. This includes sidewalks and inlet and manhole construction above subgrade level. All work shall be completed and field inspection reports received from the Permit/Subdivision Project Inspector.

After receiving favorable reports from the above listed agencies, the Hamilton County Permit/Subdivision Department schedules a pre-final inspection with the developer and the involved township.

The Hamilton County Engineer's Subdivision Supervisor in company with the developer and the township representative will conduct the ***pre-final inspection***. The township representative shall, at this time, provide the County Subdivision Supervisor with a written list of concerns of the township regarding the work. Those deemed appropriate by the County Subdivision Supervisor will be included in the inspection report furnished to the developer. The developer is not required to receive or act on any list from any other party; or to perform any work not required by these Subdivision Rules and Regulations. During this inspection, the completed work will be checked for compliance with the approved plans and specifications. Any discrepancies or failures shall be recorded and a copy of the report furnished to the developer and the township representative. The corrective work necessitated by inclusion in the report shall proceed immediately and shall be completed within One Hundred Twenty (120) Days (Exclusive of the period, December 1st through March 15th). The County Subdivision Inspector shall notify the County Subdivision Supervisor when all items have been completed.

Should the corrective work as necessitated by and included in the County Engineers Pre-Final Inspection Report not be completed as required in the preceding paragraph, the County Engineer shall declare the surety bond forfeited and proceed to complete the work by a reputable firm capable of the doing the work.

Upon completion of the corrective work by the county designated contractor (and payment to the contractor), the surety firm will be notified by the County Engineer that the provisions of the bond have been satisfied, provided that the developer has secured and provided the required maintenance surety and maintenance contract as described in section 405B of these rules and regulations.

A ***final inspection*** shall then be conducted by the Hamilton County Engineer's Subdivision Supervisor to verify that all corrective work was satisfactorily completed.

Once all corrective work has been completed and verified by the Hamilton County Engineer's Subdivision Supervisor, and the streets accepted by the Board of County Commissioners, no permits will be issued or work inspected by the Hamilton County Engineer's Permit/Subdivision Department on interior streets of the subdivision. Any permits and/or inspection for the permit work will become the responsibility of the involved township.

405 ACCEPTANCE AND RELEASE OF SURETY

A.) Following or prior to the pre-final and final inspections outlined in Section 403 of these Rules & Regulations, the Hamilton County Engineer's Survey Department will verify in the field that the monuments shown on the Subdivision Record Plat are in place. Any missing monumentation will be reported to the subdivision developer. The developer will notify his/her surveyor to have this monumentation completed prior to street acceptance. The developer's surveyor then notifies the Hamilton County Engineer's Survey Department that the missing monumentation has been set in the field. The Hamilton County Survey Department will then field verify this work and report their findings to the Permit/Subdivision supervisor.

B.) Before any dedicated street or dedicated right-of-way can be made public, a

Maintenance Surety and Maintenance Contract must be furnished to the Hamilton County Permit/Subdivision Department (see Appendices "D", "E" & "F"). This surety and contract must be between the owner/developer and the Board of County Commissioners. The surety shall be in an amount equal to eight dollars ($8.00) per lineal foot of street. The Maintenance Surety and Maintenance Contract shall be delivered to the Hamilton County Engineer's Permit/Subdivision Department. (Refer to Section 403 D).

C.) Upon receiving the Maintenance Surety and Maintenance Contract, the Township is notified that all work is completed and acceptable to the Hamilton County Engineer. The Township is requested to assent to the acceptance of the subdivision streets. Such action by the Board of Township Trustees should occur no later than the second scheduled meeting of the Trustees after the date of the request from the Office of the Hamilton County Engineer. If a positive response is not received from the Township within seven (7) days after the second scheduled meeting of the Township Trustees, the Hamilton County Engineer will proceed with the street acceptance without Township assent.

D.) All sidewalks must be built prior to street acceptance unless otherwise bonded with the involved township. The owner /developer must provide the township with a one-year Township Sidewalk Surety and Township Sidewalk Contract for incomplete sidewalk. The township shall provide the developer with the appropriate forms. After receiving the Township Sidewalk Surety and Contract, the township shall notify the Permit/Subdivision supervisor so the street acceptance process can proceed. All sidewalks shall be completed within the one-year bonding period unless other arrangements are made with the township for an additional time period. The one-year time frame for the Maintenance Surety and Sidewalk Surety begins on the date of street acceptance by the Board of Hamilton County Commissioners.

E.) When the Maintenance Surety and Maintenance Contract has been received from the developer, unless the surety remains in lieu of the maintenance contract and surety (see 404C and 404D) the Permit/Subdivision Department will proceed with the approval process for the subdivision. The Hamilton County Engineer's Permit/Subdivision Department prepares a Deed of Acceptance and submits it along with the Record Plat to the Hamilton County Administrator for action on behalf of the Board of Hamilton County Commissioners. After signatures are obtained, the subdivision streets become publicly maintained streets in the name of the Board of County Commissioners. The underlying township then maintains these public streets.

F.) Upon notification from the Board of Hamilton County Commissioners that the subdivision streets have been accepted, the Hamilton County Engineer will release the Performance Surety to the developer for cancellation.

406 MAINTENANCE SURETY RELEASE

During the one-year Maintenance Surety time period, the Township Road Superintendent may make periodic inspections and keep a record of any structural failures within the public right-of-way and public easements. The Township should immediately contact the Developer in a case where there was a significant structural failure or endangerment to the general public.

Approximately one year after acceptance of the subdivision streets as public streets, the township road superintendent in conjunction with the Hamilton County Engineer Permit/Subdivision Supervisor will make a final field inspection. Township concerns will be considered but the Permit/Subdivision Supervisor shall determine and prepare the final punch list. The County Engineer will send a letter to the developer listing the corrections if any to be made. A copy of this letter will be also sent to the township.

Upon verification that the required corrections listed on the punch list have been made by the developer, the County Engineer will issue a letter of notification to the township that the corrections have been completed. At this point the Hamilton County Engineers Permit/Subdivision Supervisor will release the maintenance surety to the developer for cancellation.

TABLE OF CONTENTS

ARTICLE V **RECORD PLAT**

501 Record Plat

502 Subdivision Reference Points
- **A.) Lot Corner**
- **B.) Subdivision Corner**
- **C.) Street Intersection**
- **D.) Section Corner**
- **E.) Intersection of a section line with street**
- **F.) Intersection of a dedicated and accepted street with lot line**

503 Survey Markers

504 County Survey Control Monuments

ARTICLE V
RECORD PLAT

501 RECORD PLAT

A subdivision plat will be accepted for platting on the Auditor's Tax Maps, if it complies with the following rules:

Any subdivision Record Plat within the unincorporated area of Hamilton County, submitted by the County Engineer to the County Auditor for platting on the tax maps, shall include closure calculations along the perimeter or boundary of said subdivision. Each perimeter course must contain a bearing expressed in degrees, minutes and seconds and a distance in feet and the decimal parts thereof, from point of origination to a point of termination of each course. Any perimeter course, which is a curve, must contain the direction of the curve (right or left), the radius, the arc length and the long cord bearing and distance.

All subdivision plats to be recorded must be submitted on mylar or linen. Plat size shall be twenty- four inches (24") by thirty-six inches (36"). The County Engineer may request, but not require, the subdivision plat be submitted in digital format on 3½" disks in DXF format following the County Engineer's Office layering standards.

The plat shall also bear the seal and signature of a Professional Surveyor licensed to practice in the State of Ohio. All irregularly shaped lots shall have positive courses and distances shown on the boundaries of said lots. All lots shall have a maximum closure error of 1/15,000.

All closures will be verified as to the accuracy of the traverse closure (1/15,000) of the area described.

All conveyances submitted to the Hamilton County Auditor for platting on the tax maps by the County Engineer shall contain sufficient description or dimensions so that the area described can be platted and surveyed, and shall be referenced or "tied in" to some well established and recorded point or monument as stated in Section 502 below.

502 SUBDIVISION REFERENCE POINTS

All subdivision plats shall be referenced or "tied in" to one or more of the following:

A.) A corner of a lot in a recorded subdivision.
B.) A corner of a recorded subdivision.
C.) The centerline intersection of two intersecting dedicated and accepted or established streets or roads.
D.) A section corner, a patent corner of a Military Survey, a quarter section corner, or a registered land corner.
E.) The intersection of a section line, a patent line of a Military Survey, or half section line with a dedicated and accepted or an established street or road. The intersection of a dedicated and accepted or established street and a lot line of a recorded subdivision.

503 SURVEY MARKERS

Monuments shall be set in accordance with the requirements of Chapter 711.03 of the Ohio Revised Code.

Monuments - There shall be three (3) monuments placed on the boundaries of all subdivisions, two (2) of which shall be on a straight line, not less than three hundred feet (300') long. Should none of the straight boundary lines be three hundred feet (300') in length, the longest straight line shall have monuments at its extremities.

Subdivisions having more than thirty (30) lots shall have an additional monument for each additional twenty (20) lots or fraction thereof. These monuments shall be located on the Record Plat and certified by the registered surveyor responsible for placing same.

504 COUNTY SURVEY CONTROL MONUMENTS

The requirements for survey control are subject to change. Therefore the developer is advised to consult with the office of the Hamilton County Engineer regarding the current version of the transfer and conveyance standards of the Hamilton County Auditor and the Hamilton County Engineer.

The requirements at the time of printing of these Rules and Regulations are as follows:

Any subdivision to be recorded must be tied to County monuments under the following circumstances:

A.) Tie to one monument if a monument is located within a one-half (1/2) mile radius of the proposed subdivision.
B.) Tie to a second county monument if a second monument is also within a one-half (1/2) mile radius of the proposed subdivision of the first monument.
C.) In all cases, the subdivision shall be tied to the State Plane Coordinate System.

Proper identification of County monuments must be denoted on the subdivision plat. A four (4)-digit number usually identifies county monuments. The County monument identifiers are available from the County Engineer's Office (Survey Department).

A County survey monument is defined as a survey monument accepted by and shown in the records of the Hamilton County Engineer.

If the subdivision or survey is not within a one-half (1/2) mile radius of a County survey monument, the Hamilton County Engineer's Office must be notified. In this instance, the County Engineer may set additional County monuments.

TABLE OF CONTENTS

<u>ARTICLE VI</u> **FRONTAGE SUBDIVISONS**

601 Curbed Road
- **A.) Berm**
- **B.) Driveways**

602 Uncurbed Road with Ditches
- **A.) Driveway over Ditch**
- **B.) Berm Alterations**
- **B.) Berm Disturbance**
- **D.) Frontage drain, sewer, culvert or natural drainage**

ARTICLE VI
FRONTAGE SUBDIVISIONS

Where lots are proposed to front on an existing State, County and/or Township Public Roads, commonly referred to as "Frontage Lots", the following shall apply:

601 CURBED ROAD

A.) The entire berm, to the property line, shall be graded to conform to the existing or prevailing contours.

B.) Driveways shall be placed to conform to the approved County Road Section.

602 UNCURBED ROAD WITH DITCHES

A.) Driveways shall be constructed over the ditch using twelve-inch (12") minimum diameter reinforced concrete pipe or equal, as approved by the Hamilton County Engineer. All driveway pipes shall be properly designed by the developer to accommodate a minimum ten (10) year frequency storm. The pipe shall be placed so as to conform to the line and grade of the ditch. Swaled driveways shall not be permitted.

B.) The berm and ditch shall not be altered without the permission of the County Engineer or the Township Trustees for township streets.

C.) Any disturbance to the berm or ditch must be restored to the original contour and profile.

D.) Drains, sewers, culverts, or natural drainage ditches along said frontage shall not be disturbed or altered in any manner without approval or permission from the Hamilton County Engineer's Office.

All frontage subdivisions shall be submitted to the Department of Public Works for flood plain review.

The purpose of this section is to assure that the roadside ditches continue to function, which is a legal duty of the Hamilton County Engineer's Office and Township Trustees.

TABLE OF CONTENTS

ARTICLE VII **BONDING REQUIREMENTS**

701 Subdivider's Contract

702 Surety

ARTICLE VII
BONDING REQUIREMENTS

701 SUBDIVIDER'S CONTRACT

When bonding proposed work in a subdivision, including both public and non-public streets, a Performance Contract is required by various sections of these Subdivision Rules and Regulations (see Section 403-D). The bond shall be delivered on a form as outlined on Appendix "A".

The construction period as shown in Section F of the Performance Contract, unless extended, shall not exceed three (3) years. Prior to the end of the three (3) year period, the Developer may submit a request in writing for an extension of the Surety time limit. This request shall include a list of unfinished work items remaining to be completed and a realistic time schedule for completing the work. The request will be reviewed by the Hamilton County Engineer who will recommend approval, conditional approval, or disapproval to the Board of County Commissioners which shall have final authority.

If the request is not approved, or if conditionally approved, all or portions of the Performance Surety may be forfeited and used for repair or completion of the remaining portions of the public improvements. This will insure reasonable and convenient access for residents, their guests and emergency vehicles.

In those instances where the Board of County Commissioners forfeits portions of the Surety for the above purpose, the Developer may be required to furnish additional Surety to insure satisfactory completion of the planned public improvements.

702 SURETY

The Developer shall provide a Performance Surety as required in various sections of these Subdivision Rules and Regulations (see Section 403-D). It shall be delivered on a form as outlined on Appendices "B" and "C".

The Surety shall remain in force until the physical improvements have been satisfactorily completed and accepted by the Hamilton County Board of County Commissioners. When a "Irrevocable Letter of Credit" is used, it shall contain a clause guaranteeing automatic one year extensions beyond the expiration date thereof, until the work is completed and accepted.

Should all work on a non public street or non-public drive be completed, all required inspection and testing received and reviewed and found satisfactory (See Section 303B), all lots sold and a Homeowners Association or maintenance established, the involved portion of the bond may be released upon application of the developer.

APPENDIX "A"

PERFORMANCE CONTRACT

This contract executed on the _____ day of _____, 20_____, by and between _____, Subdivider(s) as evidenced by a subdivision plat which is on file in the office of the Hamilton County Engineer, referred to as _____Subdivision, Hamilton County, Ohio, and the Board of County Commissioners of Hamilton County, Ohio.

WITNESSETH:

1. The Subdivider(s) hereinabove set forth is/are the owner(s) in fee simple of the real estate known as _____ Subdivision located and situated in Section _____, Town _____, Range _____, _____Township, Hamilton County, Ohio.
2. It is the purpose and intention of this agreement to have the Subdivider(s) agree in writing to the performance and completion of certain work in connection with the improvements to be located in and on said subdivision, including the installation of streets, utilities, etc. It is the further purpose of this agreement to enter into a contract obligating the Subdivider(s) to perform said work as hereinafter set forth. This contract shall be secured by a performance bond or irrevocable letter of credit attached hereto and made a part hereof.

NOW, THEREFORE, IT IS AGREED:

A. Subdivider(s) as hereinbefore described, do(es) herewith agree to construct, install and provide all public improvements and all private streets and drives as shown on the Subdivision Improvement. Plan on file in the office of the Hamilton County Engineer.

ESTIMATE OF SURFACE AND UNDERGROUND WORK

B. Subdivider(s) agree(s) that said work shall be performed, completed and done pursuant to inspection as described in Section 303 of the Hamilton County Engineers subdivisions Rules and Regulations All plans and construction within Hamilton County shall comply with the applicable "Subdivision Rules and Regulations" of the Hamilton County Engineer governing the surface physical improvements for private developments within the unincorporated areas of Hamilton County.
C. Subdivider(s) further agree(s) to perform, complete and undertake all things required to obtain the approval of the Board of County Commissioners of Hamilton County, Ohio, and to do all things required to record said plat of said subdivision with the Recorder of Hamilton County, Ohio.
D. Subdivider(s) further agree(s) to construct, install, or otherwise make all public (and private street and drive) improvements shown on the Improvement Plan and those further shown and set forth to be done and performed by the engineering drawings and specifications marked on the Improvement Plan on file in the office of the County Engineer of Hamilton County, Ohio, and to the satisfaction of the County Engineer on the date of acceptance.
E. Subdivider(s) further agree(s) to do all that is required to accomplish the acceptance of the street(s) as public street(s), within the specified time limit which includes posting a one-year Maintenance Surety and Maintenance Contract with the Board of County Commissioners of Hamilton County, Ohio.

F. All of the foregoing shall be performed within a period of three (3) years from the date of this contract, which length of time is hereby fixed by said Board of County Commissioners of Hamilton County, Ohio, as a reasonable period of time. The subdivider may request an extension, which must be for good cause and if so determined by the Hamilton County Engineer may be granted if approved by said board.

G. Subdivider(s) do(es) herewith and hereby agree to execute a surety in the sum of _____ Dollars ($_____), which amount is equal to the figure established by the Hamilton County Engineer, and which shall be to the satisfaction of and in favor of the Board of County Commissioners of Hamilton County, Ohio, to insure the faithful performance of this contract.

IN WITNESS THEREOF, the parties have hereunto set their hands this ____ day of _____, 20_____.

_____	_____
SUBDIVIDER	WITNESS
By: _____	_____
	WITNESS
_____	_____
HAMILTON COUNTY COMMISSIONERS	WITNESS

APPENDIX "B"

PERFORMANCE BOND

KNOW ALL MEN BY THESE PRESENTS that _____, as Principal, and _____, as Surety, are held and firmly bound unto the Board of County Commissioners, Hamilton County, Ohio, as Obligee, in the sum of _____, Dollars ($_____) lawful money of the United States for the payment of which, well and truly be made, we bind ourselves, our heirs, executors, successors, and assigns, jointly and severally, firmly by these presents.

SEALED with our seals and dated this _____ day of _____, 20_____.

WHEREAS, the Principal has entered into a "Subdividers Contract" with the Obligee for certain physical improvements in _____ Subdivision, in Hamilton County, Ohio, as more particularly set forth in said Contract.

NOW, THEREFORE, if the said Principal, herein before set forth, shall fully and faithfully perform all the work and procedures specified to be done and performed by said Contract executed between said Principal of this bond and the Board of County Commissioners, Hamilton County, Ohio, in accordance with said Contract, which Contract is made a part hereof by reference, the same as if fully incorporated herein; then this obligation shall be void and of no further legal effect; otherwise, this bond shall remain in full force and effect in law; it being expressly understood and agreed that the liability of the Surety for any and all claims hereunder, shall in no event exceed the penal amount of this obligation, as herein stated to be the sum of _____Dollars, $_____) and no more.

_____
Principal

By: _____

_____
Surety

By: _____

APPENDIX "C"

SAMPLE FORM
PERFORMANCE LETTER OF CREDIT

***(LENDING INSTITUTION)**
(LETTERHEAD OR FORM)

IRREVOCABLE CREDIT NO. **( )**
DATE **( )**

Board of County Commissioners
RE: **(SUBDIVISION NAME, BLK., ETC.)**
Hamilton County, Ohio

(DOLLAR AMOUNT)

Gentlemen:

We hereby establish our irrevocable letter of credit in your favor at the request of and for the account of **(COMPANY, CORP., ETC., CITY, STATE*)*** up to the aggregate amount of **(SPELLED OUT AND FIGURE AMOUNT)** United States Dollars available by your drafts drawn at sight (on us), for satisfactory completion of all the work and procedures specified in the performance contract executed between the principal and the Board of County Commissioners of Hamilton County, Ohio.(Your) drafts must be accompanied by a signed statement to the effect that **(COMPANY, CORP., ETC.)** has not fulfilled its obligations as called for in the subdividers contract dated **(EFFECTIVE DATE),** on file in the office of the Hamilton County Engineer.

We hereby agree with drawers, endorsers, and bona fide holders of drafts drawn under and in compliance with this Letter of Credit that they shall meet with due honor upon presentation if drawn and negotiated on, or after the agreed upon Subdividers Contract completion date, which is **(CONTRACT EXPIRATION DATE)**.

The amount and date of each draft so drawn must be endorsed on the back hereof by the negotiating bank.

It is a condition of this letter of credit that it shall be deemed automatically extended without amendment for one (1) year from the expiration hereof, or any further expiration date, unless thirty (30) days prior to any expiration date we shall notify you by registered mail that we elect not to consider this Letter of Credit renewed for any such additional period.

This credit is subject to the Uniform Customs and Practice for Documentary Credits International Chamber of Commerce Brochure No. 500.

Countersigned: **(INSTITUTION NAME:)**

(OTHER AUTHORIZED SIGNATURE) (AUTHORIZED OFFICER SIGNATURE)

*** BOLD TYPE TO BE FILLED IN BY SURETY COMPANY**

APPENDIX "D"

MAINTENANCE CONTRACT

This contract executed on the _____day of _____, 20_____, by and between ___ _____, Subdivider(s) as evidenced by a subdivision plat which is on file in the office of the Hamilton County Engineer, referred to as _____ _____Subdivision, Hamilton County, Ohio, and the Board of County Commissioners, Hamilton County, Ohio.

WITNESSETH:

1. The Subdivider(s) hereinabove set forth is/are the owner(s) in fee simple of the real estate known as _____ Subdivision located and situated in Section _____,Town, _____, Range _____ , _____ Township, Hamilton County, Ohio.

2. It is the purpose and intention of this Maintenance Contract to have the Developer(s) agree in writing to assure the correction of any defect or failure from any cause whatsoever appearing in any public improvement in connection with the work as required by the *Rules and Regulations* of the Hamilton County Engineer located in and on said subdivision. This contract shall be secured by a Maintenance Bond or Irrevocable Letter of Credit attached hereto and made a part hereof.

NOW, THEREFORE, IT IS AGREED:

A. Developer(s) as hereinbefore described, do(es) herewith agree to assure the correction of any structural defect or failure of materials or workmanship used in construction of any surface and/or underground features within the dedicated right-of-way and public easements, as appearing on said subdivision Record Plat. Corrections will be constructed in conformity with the subdivision *Rules and Regulations* of the Hamilton County Engineer in effect at the time the subdivision was approved for construction. This Maintenance Contract shall apply for a period of one (1) year after street acceptance by the Board of County Commissioners of Hamilton County, Ohio.

B. Developer(s) agree(s) that any structural defect or failure appearing during this one (1) year time period shall be corrected pursuant to notification from the affected Township Road Superintendent and/or the Hamilton County Engineer's Office. All corrections shall be made before the expiration date of this Maintenance Contract, said date being one (1) year from the date of street acceptance by the Board of County Commissioners of Hamilton County, Ohio.

C. Developer(s) do(es) herewith and hereby execute a Maintenance Bond or Irrevocable Letter of Credit in the sum of _____ ($_____) United States dollars, which amount is equal to the figure established by the Board of County Commissioners of Hamilton County, Ohio and which shall be to the satisfaction of, and in the favor of, the Board of County Commissioners of Hamilton County, Ohio to insure the faithful performance of this contract.

IN WITNESS THEREOF, the parties have hereunto set their hands this ____ day of _____, 20___.

_____	_____
DEVELOPER	WITNESS
By: _____	_____
	WITNESS
_____	_____
HAMILTON COUNTY COMMISSIONERS	WITNESS

APPENDIX "E"

MAINTENANCE BOND

KNOW ALL MEN BY THESE PRESENTS that _____, as Principal, and , _____, as Surety, are held and firmly bound unto the Board of County Commissioners, Hamilton County, Ohio, as Obligee, in the sum of _____, Dollars ($ _____) lawful money of the United States for the payment of which, well and truly be made, we bind ourselves, our heirs, executors, successors, and assigns, jointly and severally, firmly by these presents.

SEALED with our seals and dated this _____ day of _____, 20 _____.

WHEREAS, the Principal has entered into a "Maintenance Contract" with the Obligee for certain required work in _____ Subdivision, in Hamilton County, Ohio, more particularly set forth in said Contract.

NOW, THEREFORE, if the said Principal, herein before set forth, shall fully and faithfully perform all the work specified to be done and performed by said Contract executed between said Principal of this bond and the Board of County Commissioners of Hamilton County, Ohio, in accordance with said Maintenance Contract, which Contract is made a part hereof by reference, the same as if fully incorporated herein; then this obligation shall be void and of no further legal effect; otherwise, this Maintenance Bond shall remain in full force and effect in law; it being expressly understood and agreed that the liability of the Surety for any and all claims hereunder, shall in no event exceed the penal amount of this obligation, as herein stated to be the sum of _____Dollars, ($_____) and no more.

_____
Principal

By: _____

_____
Surety

By: _____

APPENDIX "F"

SAMPLE FORM

***(LENDING INSTITUTION)**
(LETTERHEAD OR FORM)

IRREVOCABLE CREDIT NO. **( )**
DATE **( )**

Board of County Commissioners
RE: **(SUBDIVISION NAME, BLK., ETC.)**
Hamilton County, Ohio

(DOLLAR AMOUNT)

Gentlemen:

We hereby establish our irrevocable letter of credit in your favor at the request of and for the account of **(COMPANY, CORP., ETC., CITY, STATE*)*** up to the aggregate amount of **(FIGURE & SPELLED OUT AMOUNT)** United States Dollars available by your drafts drawn at sight on us, for the maintenance in accordance with the conditions of the maintenance contract of the physical improvements in referenced subdivision.

Your drafts must be accompanied by a signed statement to the effect that **(COMPANY, CORP., ETC.)** has not fulfilled its obligations as called for in the Maintenance Contract dated **(EFFECTIVE DATE),** on file in the office of the Hamilton County Engineer.

We hereby agree with drawers, endorsers, and bona fide holders of drafts drawn under and in compliance with this letter of credit that they shall meet with due honor upon presentation if drawn and negotiated on, or after agreed upon contract completion date, which is **(CONTRACT EXPIRATION DATE)**.

The amount and date of each draft so drawn must be endorsed on the back hereof by the negotiating bank.

This credit is subject to the Uniform Customs and Practice for Documentary Credits International Chamber of Commerce Brochure No. 500.

Countersigned: **(INSTITUTION NAME:)**

(OTHER AUTHORIZED SIGNATURE) **(AUTHORIZED OFFICER)**

*** BOLD TYPE TO BE FILLED IN BY SURETY COMPANY**

APPENDIX "G"

TESTING PROCEDURES BY INDEPENDENT TEST LABORATORIES

G-1 Approval of Independent Test Firms

Certified Independent Testing Firms shall be approved by the Hamilton County Engineer prior to performing testing as required by the Subdivision Rules and Regulations Governing The Surface Physical Improvements For Private Development Within The Unincorporated Areas Of Hamilton County.

G-2 Required Testing of Trenches (306)

In addition to performing actual compaction/density tests in trenches, as per ODOT C&MS Section 603.10 and 603.11 as required herein, the testing firm employed is responsible for certifying in writing, that proper backfill procedures were used by the contractor performing the work.

Whenever a failing test is experienced, no further backfill shall be placed until the problem is corrected and follow-up tests have been made with satisfactory results. The completed test within a work area should demonstrate uniform inspection/testing coverage of the entire area.

Results of tests should be reported promptly to the contractor's representative and to the Hamilton County inspector assigned to the work. Copies of test reports shall be submitted to the office of the Hamilton County Engineer's Permit/Subdivision Department within seven (7) working days.

Any instance of lack of cooperation by the contractor with the technician or failure to properly perform the work should be reported to the office of the Hamilton County Engineer's Permit/Subdivision Department immediately.

G-3 Required Testing of Embankments/Subgrades (Section 305)

In addition to performing actual compaction/density tests for embankments and/or subgrades, the testing firm employed is responsible for certifying in writing, that proper procedures were used by the contractor performing the work, including proper materials, equipment and methods, and as described in the specifications.

Individual tests may represent more than one lift of embankment provided that tests are begun at the lower portion of the embankment, with satisfactory results being obtained. The technician must observe and record that all conditions remain the same (materials, equipment and methods) wherever tests represent more than one lift.

Whenever failing tests are experienced, no further embankment shall be placed until the problem is corrected and follow-up tests performed with satisfactory results. The completed tests within a work area should demonstrate uniform inspection/testing coverage of the entire area.

Results of tests should be reported promptly to the contractor's representative and to the Hamilton County Inspector assigned to the work. Copies of test reports shall be submitted to the office of the Hamilton County Engineer's Permit/Subdivision Department within seven (7) working days.

Any instance of lack of cooperation by the contractor with the technician, or failure to properly perform the work, should be reported to the office of the Hamilton County Engineer's Permit/Subdivision Department immediately.

APPENDIX "H"

HAMILTON COUNTY ENGINEER
PERMIT/SUBDIVISION DEPARTMENT
700 COUNTY ADMINISTRATION BUILDING
138 EAST COURT STREET
CINCINNATI OH 45202

SUBDIVISION IMPROVEMENT PLAN REVIEW

(SUBDIVISION RULES & REGULATIONS – ARTICLE 1 / SEC. 107)

Subdivision Name: _____

Developer: _____

Address: _____

Contact Person/Phone Number: _____

Fax Number: _____ *E-Mail:* _____

*AMOUNT DUE - $120.00

Date: _____ *Check Number:* _____

Received by: _____

NOTE: PAYMENT MUST BE MADE PRIOR TO IMPROVEMENT PLAN REVIEW

*Payment to be made at the Permit Counter in the Co. Engineer's Office; check payable to "HAMILTON COUNTY TREASURER". (Please write subdivision name on check)

APPENDIX "I"

APPLICATION TO CONSTRUCT THE PHYSICAL IMPROVEMENTS AS SHOWN ON THE SUBDIVISION IMPROVEMENT PLAN

FEE AMOUNT: $1,000.00

Date: _____

The undersigned agrees to pay the inspection fees and to do all work in _____ Subdivision, Section/Block _____ in _____Township in accordance with the "Rules and Regulations of the Hamilton County Engineer governing the Surface Physical Improvements for private developments within the unincorporated areas of Hamilton County" and amendments thereto, in effect on the date of said improvement plan approval.

_____
Signature of Developer

_____
Name (typed or printed) of Developer

_____
Address

_____
City, State Zip Code

_____
Contact Person / Phone

Fax: _____ E-Mail: _____

The contractor listed below will be performing work in the subdivision and are authorized to request inspection.

_____
Contractor's Name / Phone

Approved Improvement Plans for the above subdivision are on file in this office. The developer has deposited the proper inspection fees and is hereby permitted to commence work on items inspected by the office.

_____ _____
Date Hamilton County Permit/Subdivision Supervisor

NOTE: This application applies to a subdivision as a whole or to sections/blocks thereof, as said sections/blocks are constructed. Whenever subdivisions are constructed in sections/blocks, this information shall be clearly delineated on the application.

PAVING DETAILS – RESIDENTIAL SUBDIVISION

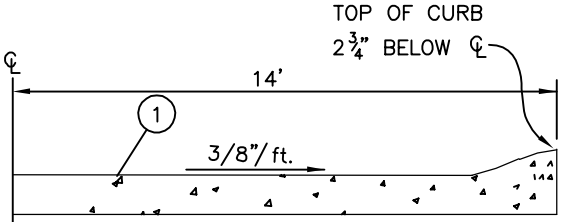

- FOR JOINT SPACING REQUIREMENTS, SEE DRAWING 4 AND 7
- FOR SLIP FORM METHOD, SEE SECTION 308D
- FOR EXPANSION JOINT DOWEL BAR UNITS IN RIGID PAVEMENT, SEE DRAWING 4 AND 7
- SEE STANDARD 3 FOR DETAILS OF UNDERDRAINS IN SAGS.

TYPE #1 RIGID PAVEMENT

1. 452 – 7" CONCRETE PAVEMENT (CLASS "C")
2. 304 – 3" AGGREGATE BASE COURSE
3. 304 – 3" AGGREGATE BASE COURSE
4. 302 – 3" ASPHALT CONCRETE BASE, PG. 70–22 (302 USING 301 MIX DESIGN)

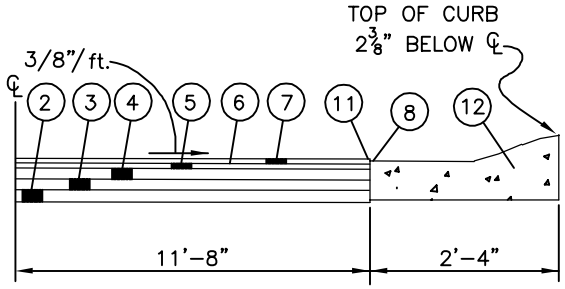

TYPE #2 FLEXIBLE PAVEMENT

5. 448 – ASPHALT CONCRETE INTERMEDIATE COURSE, TYPE 2, PG. 70–22, MIN. 1½"
6. 407 – TACK COAT TO BE APPLIED NOT LESS THAN 9 MONTHS AFTER INTERMEDIATE COURSE OF 448
7. 448 – 1½"ASPHALT CONCRETE SURFACE COURSE, Type 1H TO BE APPLIED NOT LESS 9 MONTHS AFTER PLACEMENT OF 448 INTERMEDIATE COURSE
8. SURFACE OF 448 COURSE TO FINISH 1/2" ABOVE GUTTER PLATE
9. 302 – 5" ASPHALT CONCRETE BASE, PG. 70–22 (302 USING 301 MIX DESIGN)

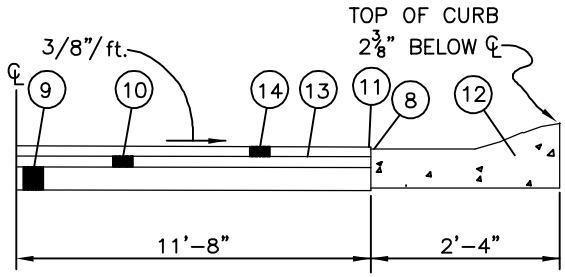

TYPE #3 FLEXIBLE PAVEMENT

10. 448 – ASPHALT CONCRETE INTERMEDIATE COURSE, TYPE 2, PG. 70–22, MIN. 1½"
11. 3" WIDE SEAL OF AC–20 ASPHALT FOLLOWING PLACEMENT OF 448 INTERMEDIATE AND SURFACE COURSE
12. CONCRETE CURB & GUTTER
13. 407 – TACK COAT TO BE APPLIED NOT LESS THAN 9 MONTHS AFTER PLACEMENT OF 448 INTERMEDIATE COURSE
14. 448 – 1½"ASPHALT CONCRETE SURFACE COURSE, Type 1H TO BE APPLIED NOT LESS 9 MONTHS AFTER PLACEMENT OF 448 INTERMEDIATE COURSE

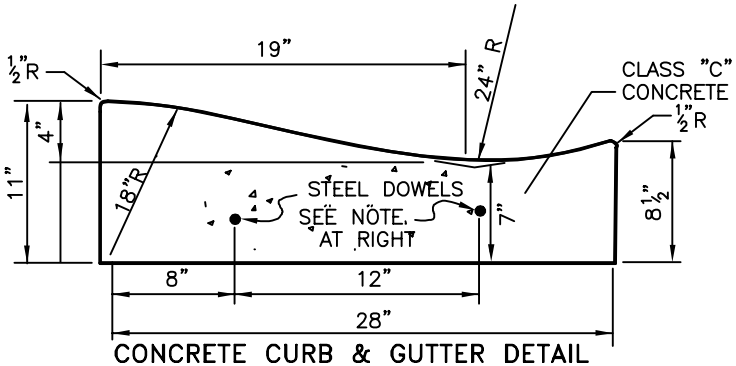

CONCRETE CURB & GUTTER DETAIL

REQUIREMENTS AS SHOWN WITH EXPANSION JOINTS AT RADII AND INLETS, IMPRESSED CONTRACTION JOINTS AT 10' SPACING BETWEEN EXPANSION JOINTS.

NOTE: ONE INCH NON–EXTRUDING EXPANSION JOINTS W/ TWO DOWELS AND SLEEVES OR TWO DOWEL BAR ASSEMBLIES.

SEE STANDARD 3 FOR UNDERDRAIN REQUIREMENTS AT SAG POINTS IN VERTICAL PROFILE.

HAMILTON COUNTY SUBDIVISION STANDARD		1
DATE	4-1-06	RLM

INDUSTRIAL SUBDIVISION
TYPICAL HALF SECTION

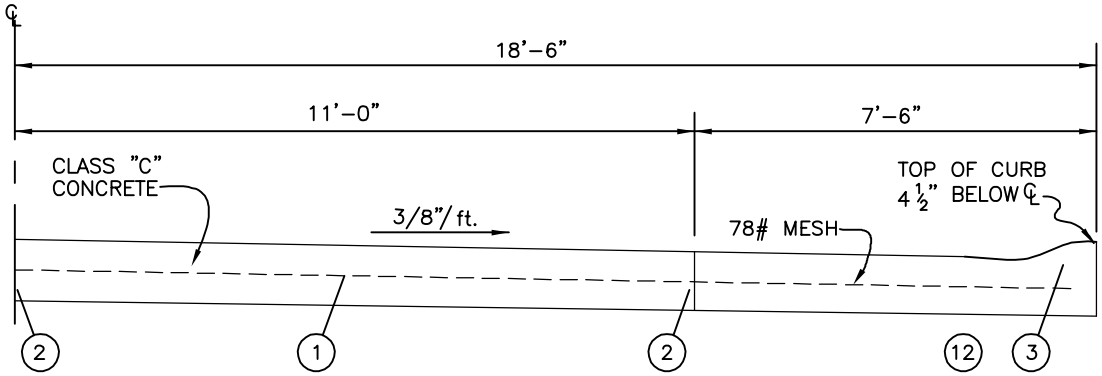

RIGID PAVEMENT

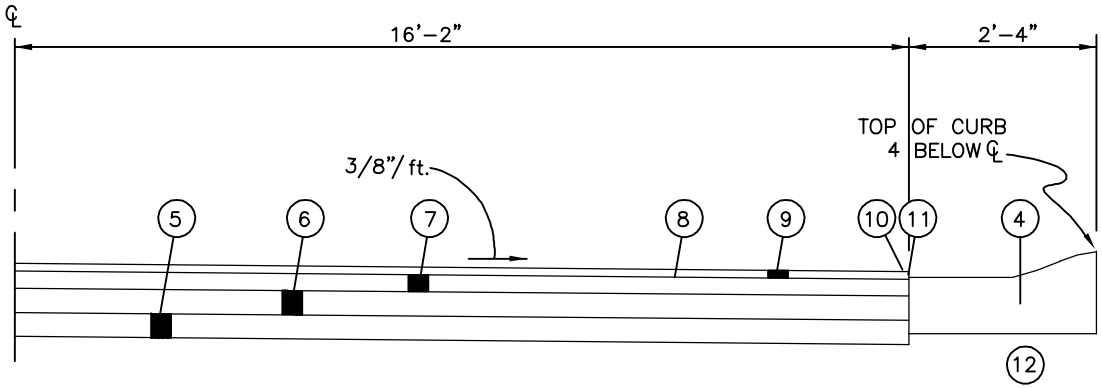

FLEXIBLE PAVEMENT

1. 451 – 8" REINFORCED PORTLAND CEMENT CONCRETE PAVEMENT
2. STANDARD LONGITUDINAL JOINT WITH 5/8" HOOK BOLTS
3. 5" CONCRETE ROLL CURB (MONOLITHIC)
4. STANDARD CONCRETE CURB AND GUTTER (CLASS C)
5. 301 – 4" ASPHALT CONCRETE BASE, PG. 70–22
6. 301 – 4" ASPHALT CONCRETE BASE, PG. 70–22
7. 448 – ASPHALT CONCRETE INTERMEDIATE COURSE, TYPE 2, PG. 64–28, MIN. 3"
8. TACK COAT TO BE APPLIED NOT LESS THAN NINE MONTHS AFTER 448 INTERMEDIATE COURSE
9. 448 – 1½"ASPHALT CONCRETE SURFACE COURSE, Type 1H TO BE APPLIED NOT LESS 9 MONTHS AFTER PLACEMENT OF 448 INTERMEDIATE COURSE
10. 3" WIDE SEAL OF AC–20 ASPHALT FOLLOWING PLACEMENT OF 448 INTERMEDIATE AND SURFACE COURSE
11. SURFACE OF 448 COURSE TO FINISH 1/2" ABOVE GUTTER PLATE
12. PROVIDE SIMILAR UNDERDRAIN TREATMENT AS DETAILED ON STANDARD 3.

HAMILTON COUNTY SUBDIVISION STANDARD		2
DATE	4-1-06	RLM

HALF SECTION WITH CONCRETE ROLL CURB AND SIDEWALK

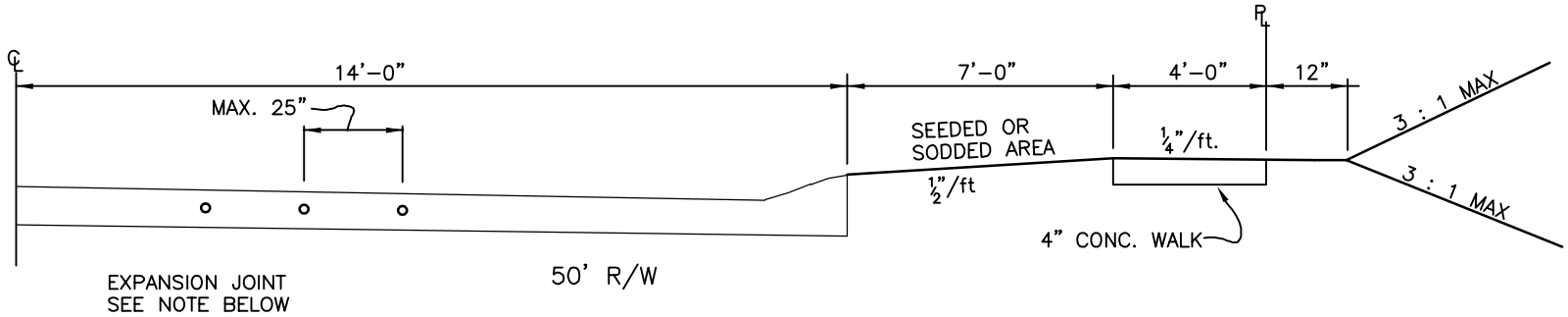

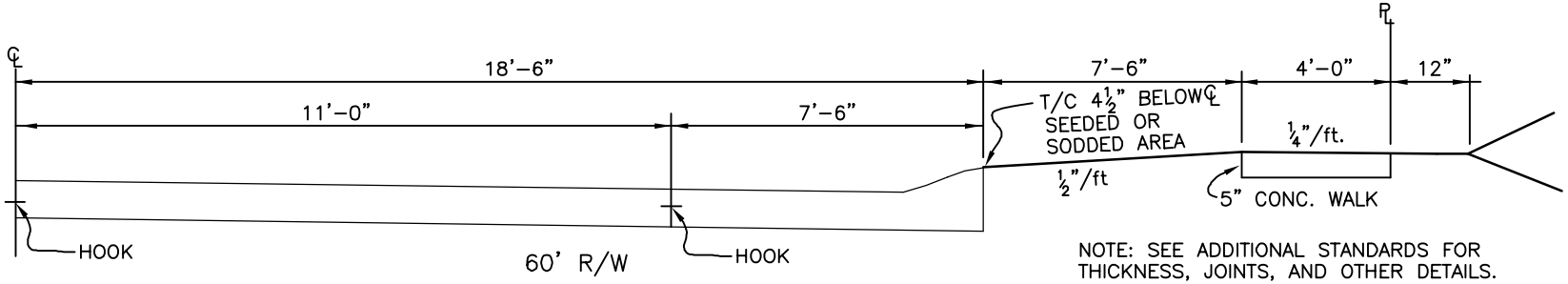

NOTE: SEE ADDITIONAL STANDARDS FOR THICKNESS, JOINTS, AND OTHER DETAILS.

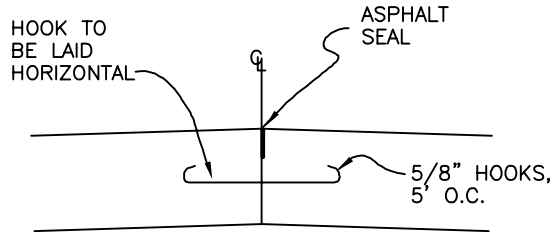

LONGITUDINAL JOINT

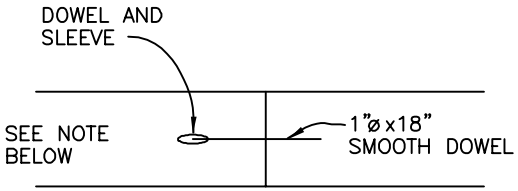

CONSTRUCTION JOINT
(TRANSVERSE)

LONGITUDINAL JOINT
2¼" x ⅛" PREMOLDED JT. MATERRAL,
2¼" x ¼" IMPRESSED OR SAWED JT.
IMPRESSED AND SAWED JTS. SHALL BE SEALED

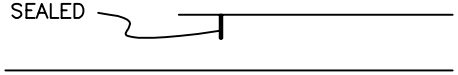

CONTRACTION JOINT

NOTE: IF CONSTRUCTION JOINT IS LOCATED AT A CONTRACTION JOINT, DOWEL SLEEVES (3") SHALL BE USED AND THE SLEEVE END COATED WITH 140 SAE OIL (OR EQUAL). IF NOT AT A CONSTRUCTION JOINT THE 1" x 18" DOWEL SHALL NOT BE OILED NOR SHALL SLEEVE BE USED.

EXPANSION JOINTS SHALL BE CONSTRUCTED IN ACCORDANCE WITH DETAILS OF ODOT, STD. DRAWING BP–2.2, CURRENT EDITION.

HAMILTON COUNTY SUBDIVISION STANDARD		3
DATE	4-1-06	RLM

TYPICAL UTILITY LOCATION

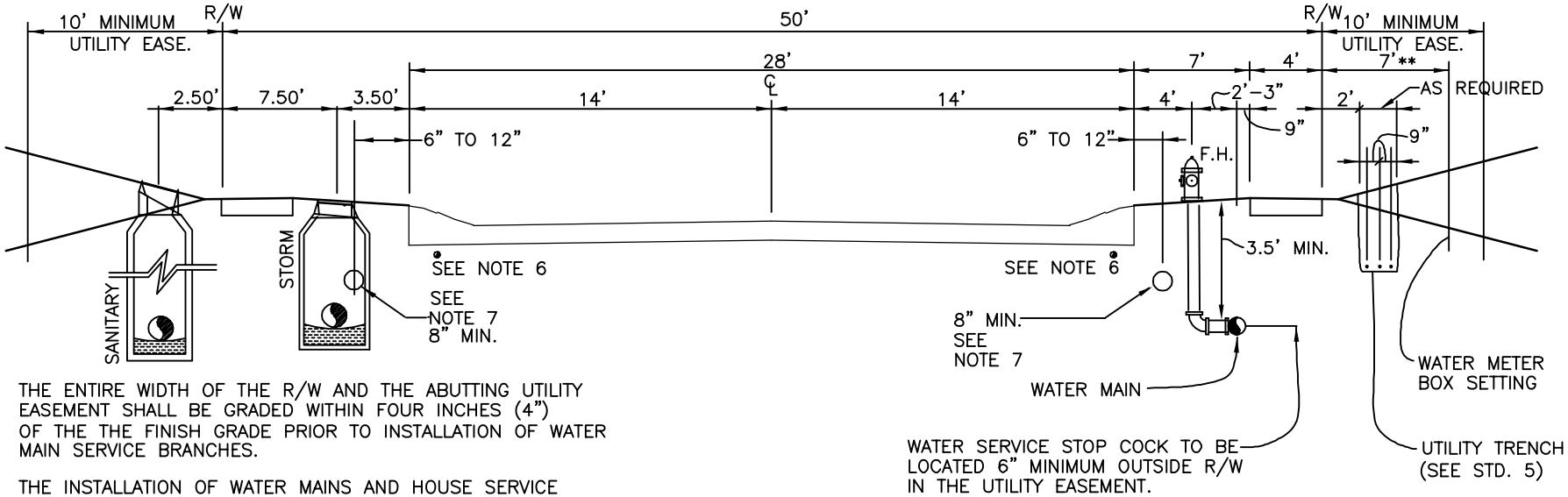

1. THE ENTIRE WIDTH OF THE R/W AND THE ABUTTING UTILITY EASEMENT SHALL BE GRADED WITHIN FOUR INCHES (4") OF THE THE FINISH GRADE PRIOR TO INSTALLATION OF WATER MAIN SERVICE BRANCHES.
2. THE INSTALLATION OF WATER MAINS AND HOUSE SERVICE BRANCHES SHALL BE PERFORMED PRIOR TO SUBGRADE AND THE INSTALLATION OF ELECTRIC, TELEPHONE AND CABLE TV LINES. NO JOINTS WILL BE PERMITTED IN THE SERVICE BRANCH BETWEEN THE STOP COCK AND THE METER SETTING.
3. THE INSTALLATION OF SANITARY SEWERS, INCLUDING HOUSE LATERALS SHALL BE THE FIRST ITEM OF UNDERGROUND WORK PERFORMED WITHIN THE DEVELOPMENT UNLESS OTHERWISE SPECIFICALLY AUTHORIZED BY THE HAMILTON COUNTY ENGINEER.
4. SANITARY LATERALS SHALL BE CONSTRUCTED TO THE LIMITS OF THE UTILITY EASEMENTS AND AT THE SAME TIME THAT THE SEWER IS INSTALLED.
5. MANHOLE CASTING (FRAME AND LID) SHALL BE SET TO MATCH CROSS SLOPE.
6. SEE STD. 3 FOR DETAIL OF DRAINS AT SAG POINTS IN VERTICAL PROFILE.

**LOCATION OF WATER METER BOX SHALL GENERALLY BE SEVEN FEET (7') BEYOND THE R/W LINE. IN SPECIAL CASES DUE TO PHYSICAL ENCUMBRANCES THE METER BOX MAY BE LOCATED BETWEEN FIVE FEET (5') AND TEN FEET (10') FROM THE PROPERTY LINE AS DETERMINED BY THE WATER WORKS. IN THOSE CASES WHERE THE NORMAL SEVEN FEET (7') DIMENSION IS EXCEEDED THE SERVICE BRANCH SHALL BE EXTENDED A MINIMUM OF THREE FEET (3') BEYOND THE BOX IN THE ORIGINAL INSTALLATION. THE END OF THE WATER SERVICE BRANCH SHALL BE CAPPED UTILIZING A FLARED COPPER TO IRON FITTING AND A BRASS PLUG. THE BRANCH SHALL BE PRESSURIZED FROM MAIN TO PLUG.

7. LOCATIONS OF 8"MINIMUM DIAMETER COLLECTOR PIPE WHERE REQUIRED FOR DOWNSPOUT AND/OR SUMP PUMP CONNECTIONS. OUTLET TO NEAREST CATCH BASIN. 24" MINIMUM DEPTH REQUIRED TO FLOWLINE OF PIPE. ONE 6" LATERAL PER LOT SHALL BE INSTALLED. PIPE SHALL MEET THE REQUIREMENTS OF ODOT 707.33, 707.42 (ASTM F949) OR 707.43 (ASTM F794). PIPE SHALL BE NON-PERFORATED AND INSTALLED WITH WATERTIGHT CONNECTIONS. A SUITABLE CLEANOUT STRUCTURE SHALL BE PROVIDED AT THE UPSTREAM END OF THE COLLECTOR PIPE. CLEANOUT STRUCTURES SHALL BE OF UNIFORM DESIGN WITH READILY ACCESSIBLE CAPS LEVEL WITH THE SURROUNDING GROUND. PREFABRICATED UNITS MAY BE PROVIDED. ACCESSIBILITY FOR CLEANOUT EQUIPMENT IS A CONDITION OF ACCEPTANCE BY THE ENGINEER. BACKFILL SHALL CONFORM TO 603.10 FOR TYPE B CONDUIT, THE TOP 8" SHALL BE COMPACTED TOPSOIL CONFORMING TO ITEM 653. BEDDING SHALL CONFORM TO 603.06.

HAMILTON COUNTY SUBDIVISION STANDARD		4
DATE	4-1-06	RLM

JOINT ELECTRIC, GAS, TELEPHONE, AND CATV INSTALLATION

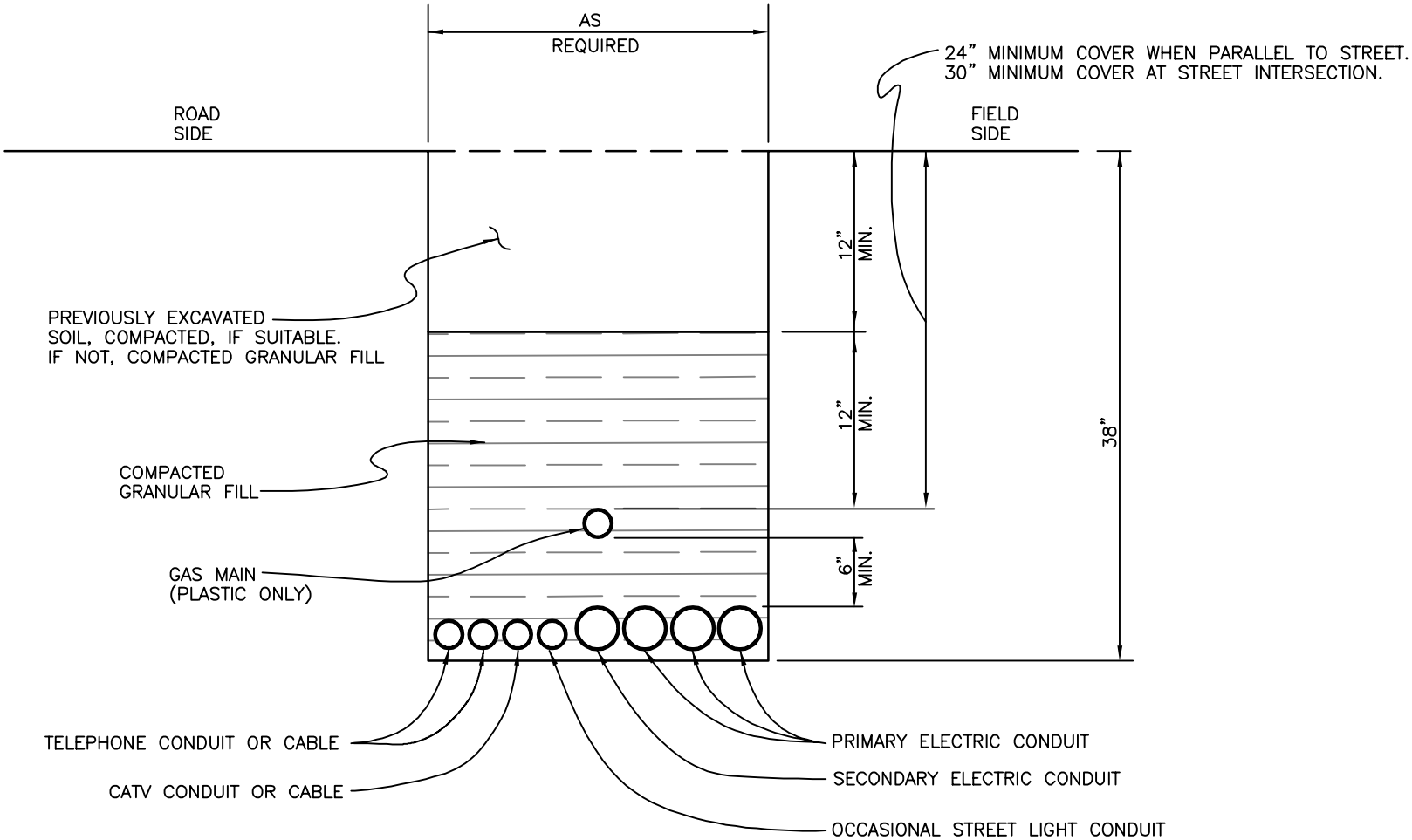

HAMILTON COUNTY SUBDIVISION STANDARD		5
DATE	4-1-06	RLM

UNDERDRAIN DETAIL
AT PAVEMENT SAG

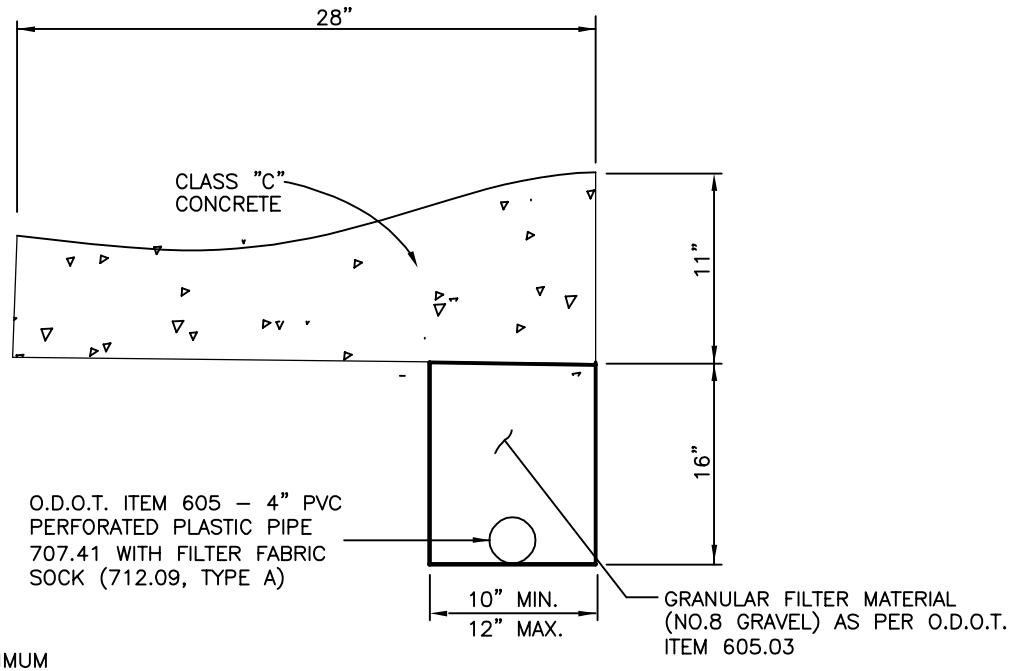

NOTE: UNDERDRAIN SHALL EXTEND 30 L.F. MINIMUM
IN BOTH DIRECTIONS FROM SAG CATCH BASINS.

HAMILTON COUNTY SUBDIVISION STANDARD		6
DATE	4-1-06	RLM

STANDARD PAVEMENT DRAWING
"A–A ZONE" STREETS

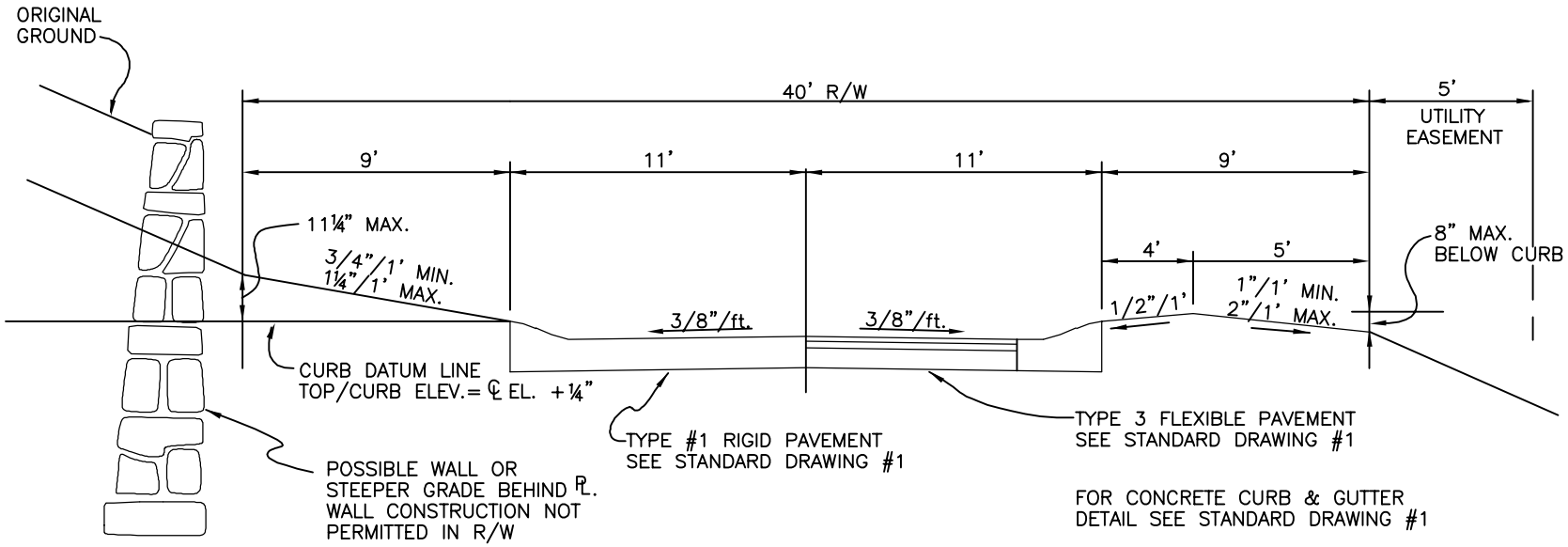

UTILITY LOCATION NOTE:
IF SANITARY AND STORM SEWER SYSTEMS ARE REQUIRED, INCLUDING MANHOLES, THEY SHALL BE LOCATED IN THE AREA BETWEEN THE BACK OF CURB AND THE R/W LINE, AND ON OPPOSITE SIDES OF THE STREET. WATER MAIN SHALL LIKEWISE BE LOCATED WITHIN THE BERM AREA. GAS MAINS SHALL NOT BE LOCATED ON THE SAME SIDE OF THE OF THE STREET AS THE SANITARY SEWER. THE DEVELOPER SHALL PROVIDE FIVE FOOT (5') MINIMUM WIDTH UTILITY EASEMENT ALONG ONE SIDE OF THE R/W FOR INSTALLATION OF GAS, UNDERGROUND ELECTRIC, TELEPHONE AND CABLE T.V. LINES. THE LATTER CAN OCCUPY A COMMON TRENCH LOCATED TWO FOOT (2') OUTSIDE THE R/W. SEE STD. DRAWING 5 AND 6 FOR DETAILS.

HAMILTON COUNTY SUBDIVISION STANDARD		7
DATE	4 - 1 - 06	RLM

TYPICAL SECTION FOR P.U.D. PUBLIC STREET

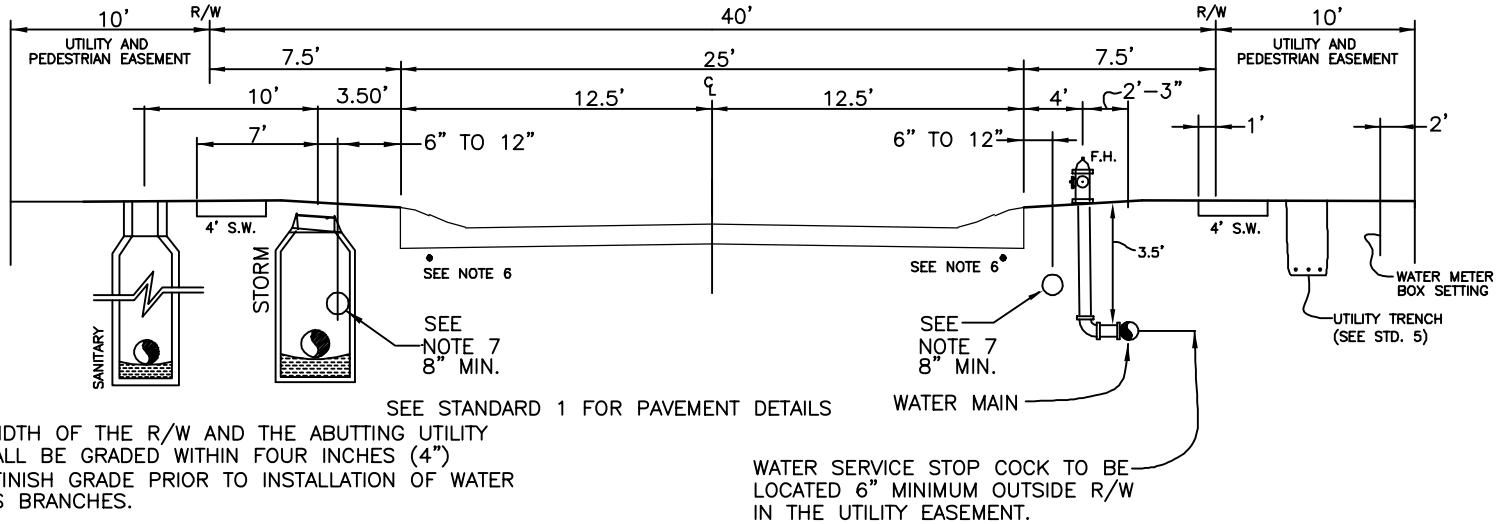

1. THE ENTIRE WIDTH OF THE R/W AND THE ABUTTING UTILITY EASEMENT SHALL BE GRADED WITHIN FOUR INCHES (4") OF THE THE FINISH GRADE PRIOR TO INSTALLATION OF WATER MAIN SERVICES BRANCHES.

2. THE INSTALLATION OF WATER MAINS AND HOUSE SERVICE BRANCHES SHALL BE PERFORMED PRIOR TO SUBGRADE AND THE INSTALLATION OF ELECTRIC, TELEPHONE AND CABLE TV LINES. NO JOINTS WILL BE PERMITTED IN THE SERVICE BRANCH BETWEEN THE STOP COCK AND THE METER SETTING.

3. THE INSTALLATION OF SANITARY SEWERS, INCLUDING HOUSE LATERALS SHALL BE THE FIRST ITEM OF UNDERGROUND WORK PERFORMED WITHIN THE DEVELOPMENT UNLESS OTHERWISE SPECIFICALLY AUTHORIZED BY THE HAMILTON COUNTY ENGINEER.

4. SANITARY LATERALS SHALL BE CONSTRUCTED TO THE LIMITS OF THE UTILITY EASEMENTS AND AT THE SAME TIME THAT THE SEWER IS INSTALLED.

5. MANHOLE CASTING (FRAME AND LID) SHALL BE SET TO MATCH CROSS SLOPE.

6. SEE STD. PLATE 3 FOR DETAIL OF DRAINS AT SAG POINTS IN VERTICAL PROFILE.

7. LOCATIONS OF 8"MINIMUM DIAMETER COLLECTOR PIPE WHERE REQUIRED FOR DOWNSPOUT AND/OR SUMP PUMP CONNECTIONS. OUTLET TO NEAREST CATCH BASIN. 24" MINIMUM DEPTH REQUIRED TO FLOWLINE OF PIPE. ONE 6" LATERAL PER LOT SHALL BE INSTALLED. PIPE SHALL MEET THE REQUIREMENTS OF ODOT 707.33, 707.42 (ASTM F949) OR 707.43 (ASTM F794). PIPE SHALL BE NON-PERFORATED AND INSTALLED WITH WATERTIGHT CONNECTIONS. A SUITABLE CLEAN OUT STRUCTURE SHALL BE PROVIDED AT THE UPSTREAM END OF THE COLLECTOR PIPE. CLEAN OUT STRUCTURES SHALL BE OF UNIFORM DESIGN WITH READILY ACCESSIBLE CAPS LEVEL WITH THE SURROUNDING GROUND. PREFABRICATED UNITS MAY BE PROVIDED. ACCESSIBILITY FOR CLEAN OUT EQUIPMENT IS A CONDITION OF ACCEPTANCE BY THE ENGINEER. BACKFILL SHALL CONFORM TO 603.10 FOR TYPE B CONDUIT. BEDDING SHALL CONFORM TO 603.06.

** LOCATION OF WATER METER BOX SHALL GENERALLY BE SEVEN FEET (7') BEYOND THE R/W LINE. IN SPECIAL CASES DUE TO PHYSICAL ENCUM-BRANCHES THE METER BOX MAY BE LOCATED BETWEEN FIVE FEET (5') AND TEN FEET (10') FROM THE PROPERTY LINE AS DETERMINED BY THE WATER WORKS. IN THOSE CASES WHERE THE NORMAL SEVEN FEET (7') DIMENSION IS EXCEEDED THE SERVICE BRANCH SHALL BE EXTENDED A MINIMUM OF THREE FEET (3') BEYOND THE BOX IN THE ORIGINAL INSTALLATION. THE END OF THE WATER SERVICE BRANCH SHALL BE CAPPED UTILIZING A FLARED COPPER TO IRON FITTING AND A BRASS PLUG. THE BRANCH SHALL BE PRESSURIZED FROM MAIN TO PLUG.

8. INCLUSION OF SIDEWALK SHALL BE AS DETERMINED BY THE HAMILTON COUNTY REGIONAL PLANNING COMMISSION AND / OR THE TOWNSHIP

9. SIDEWALK INSTALLED IN THE EASEMENT SHALL BE MAINTAINED BY THE HOME OWNERS.

HAMILTON COUNTY SUBDIVISION STANDARD		8
DATE	4-1-06	RLM

STANDARD PAVEMENT DRAWING
CUL–DE–SAC DETAILS

PERMANENT "T" TYPE TURNAROUND

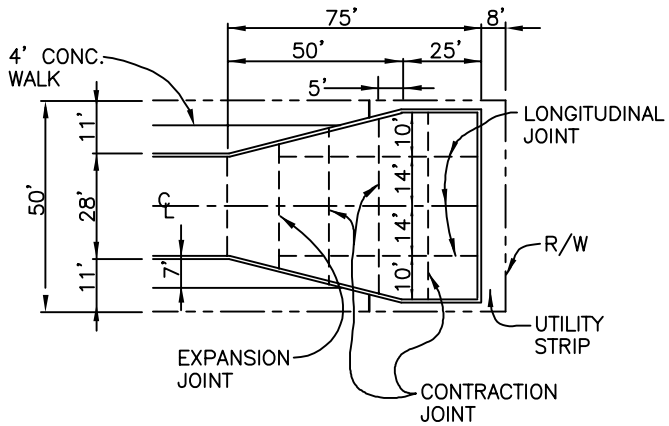

PERMANENT "T" TYPE TURNAROUNDS NOT PERMITTED ON RESIDENTIAL STREETS UNLESS THE ABUTTING LOTS HAVE A DEPTH OF 110 FEET OR LESS FROM THE NORMAL 50 FOOT STREET R/W LINE.

STANDARD TEAR DROP TURNAROUND

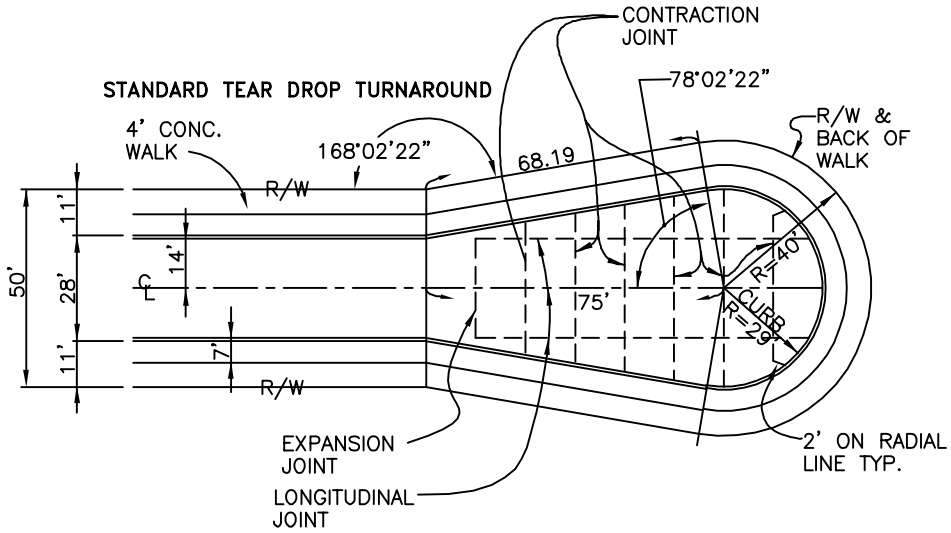

OFFSET TEAR DROP TURNAROUND

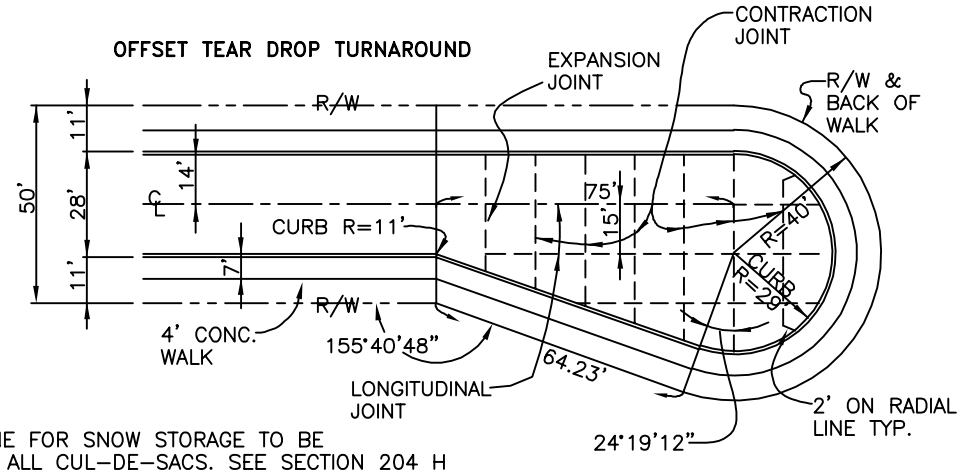

TEMPORARY TURNAROUND
USE FLEX PAVEMENT MATERIAL

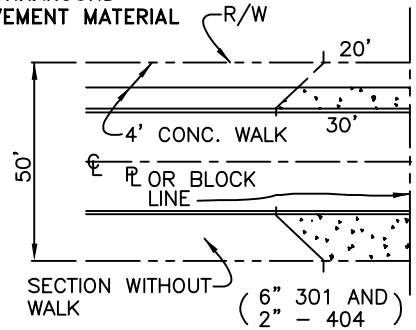

15' CLEAR ZONE FOR SNOW STORAGE TO BE PROVIDED FOR ALL CUL–DE–SACS. SEE SECTION 204 H OF THESE RULES AND REGULATIONS.

TEMPORARY TURNAROUND SHALL BE INSTALLED WHERE THE PAVEMENT ENDS AT THE PROPERTY LINE AND WHERE PAVEMENT END OCCURS MORE THAN 200 FEET FROM AN INTERSECTION. TURNAROUNDS SHALL BE INSTALLED AT END OF BLOCK LINES WHERE THE EXTENSION OF THE PAVEMENT IS NOT IMMEDIATELY ANTICIPATED.

EXPANSION AND CONTRACTION JOINTS APPLY TO TYPE 1 RIGID PAVEMENT ONLY.

HAMILTON COUNTY SUBDIVISION STANDARD		9
DATE	4-1-06	RLM

RESIDENTIAL DRIVEWAY APRON DETAILS

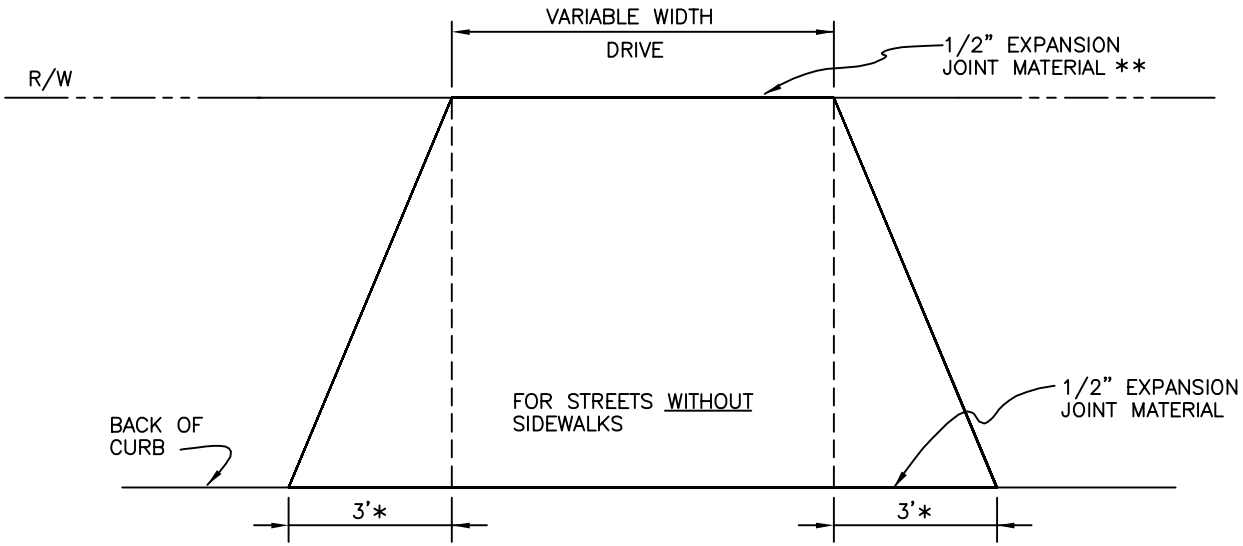

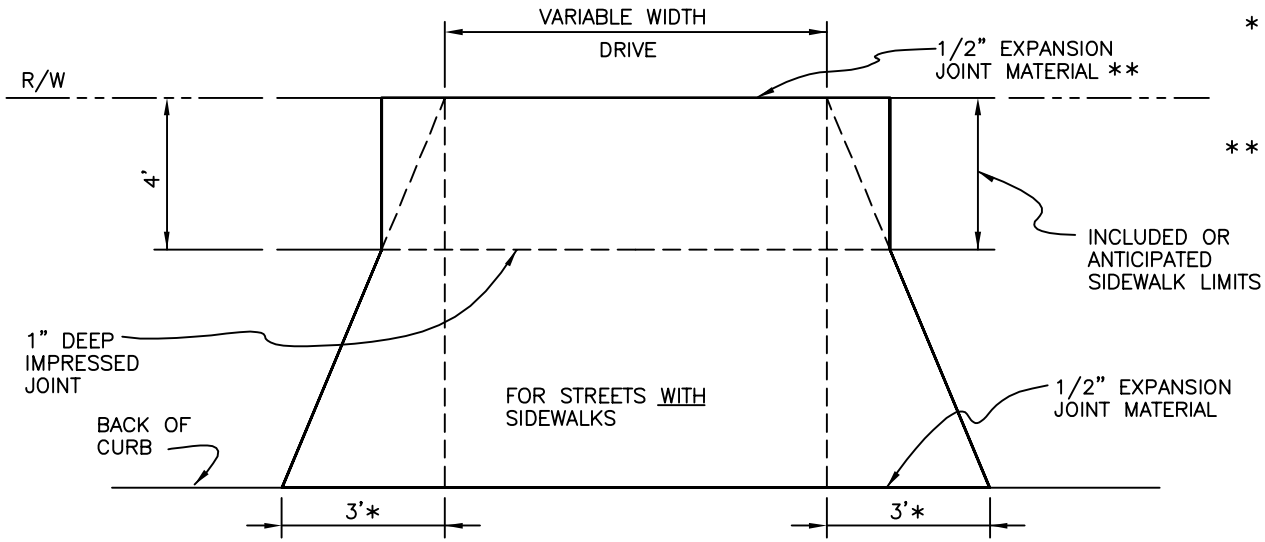

NOTE:
DRIVE APRONS SHALL BE CONSTRUCTED OF CLASS C PORTLAND CEMENT CONCRETE, 5" MINIMUM THICKNESS SEE SECTION 204

* THREE FOOT DIMENSION IS MINIMUM. ONE SIDE MAY BE INCREASED IF DRIVE IS BUILT AT AN ANGLE TO STREET OTHER THAN 90°

** EXPANSION JOINT MAY BE OMITTED AT THIS LOCATION IF ABUTTING DRIVEWAY IS NOT PORTLAND CEMENT CONCRETE OR BRICK PAVERS.

HAMILTON COUNTY SUBDIVISION STANDARD		10
DATE	4-1-06	RLM

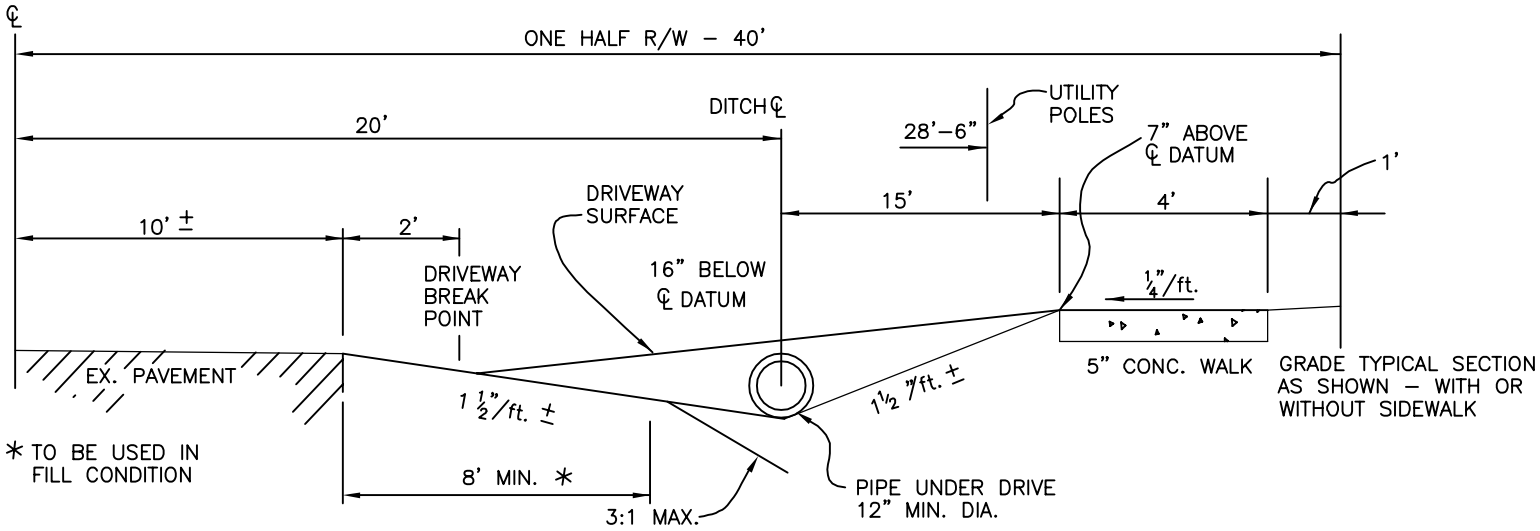

COUNTY ROAD TYPICAL ONE HALF SECTION – 80 RIGHT–OF–WAY

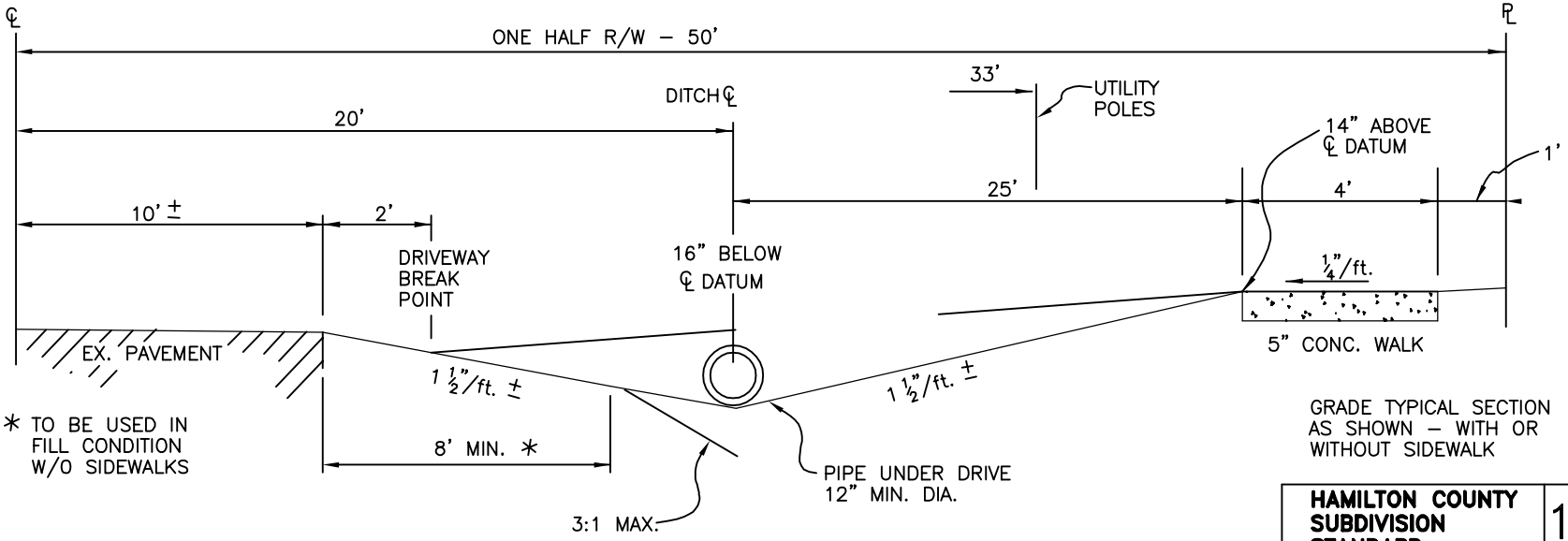

NOTE: THESE SECTIONS DO NOT APPLY ALONG SUPERELEVATED CURVES. CONTACT COUNTY ENGINEER'S OFFICE

COUNTY ROAD TYPICAL ONE HALF SECTION – 100' RIGHT–OF–WAY

HAMILTON COUNTY SUBDIVISION STANDARD		11
DATE	4-1-06	RLM

ALTERNATE HALF–SECTION ALONG EXISTING PUBLIC COUNTY ROAD

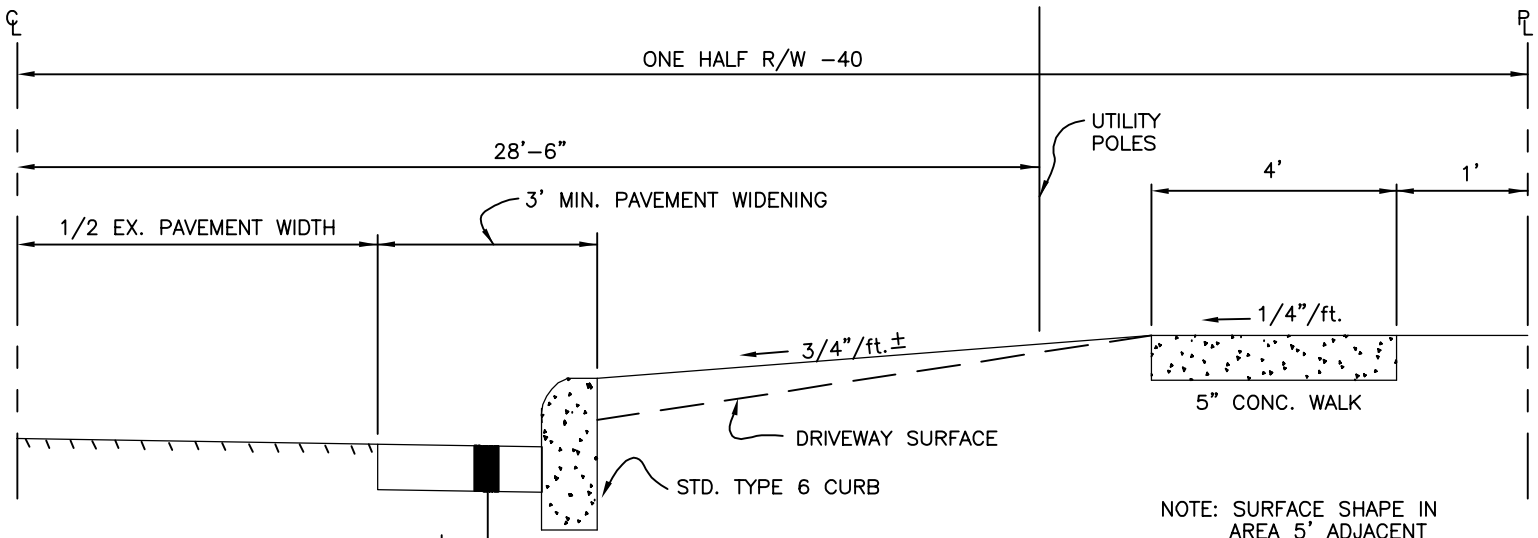

NOTE: SURFACE SHAPE IN AREA 5' ADJACENT TO ℄ IS THE SAME WITH OR WITHOUT SIDEWALK

ITEM 203–COMPACTED SUBGRADE
ITEM 301–9" BASE (2–4½"COURSES)
ITEM 402–1½" LEVELING COURSE
ITEM 404–1" SURFACE COURSE
OR
ITEM 451–9" (IF EX. IS CONCRETE)
OR
AS DIRECTED BY ENGINEER

DEVELOPER SHALL INCLUDE IN HIS/HER PLANS AND SHALL MAKE PROVISIONS FOR MAINTAINING EXISTING DITCH FLOW AND FOR PROVIDING CURB OUTLETS WHENEVER THESE SECTIONS ARE USED

NOTE: ABOVE DETAIL IS FOR EXISTING 40' HALF R/W. 50' HALF R/W SECTION TO BE SIMILAR EXCEPT UTILITY POLES DISTANCE 33'

NOTE: FOR SUPERELEVATED CURVE CONTACT THE HAMILTON COUNTY ENGINEERS OFFICE.

HAMILTON COUNTY SUBDIVISION STANDARD		12
DATE	4-1-06	RLM

BLOCKOUT DETAIL
FLEXIBLE PAVEMENT

INLET INSTALLATION IN
28" CONCRETE CURB & GUTTER

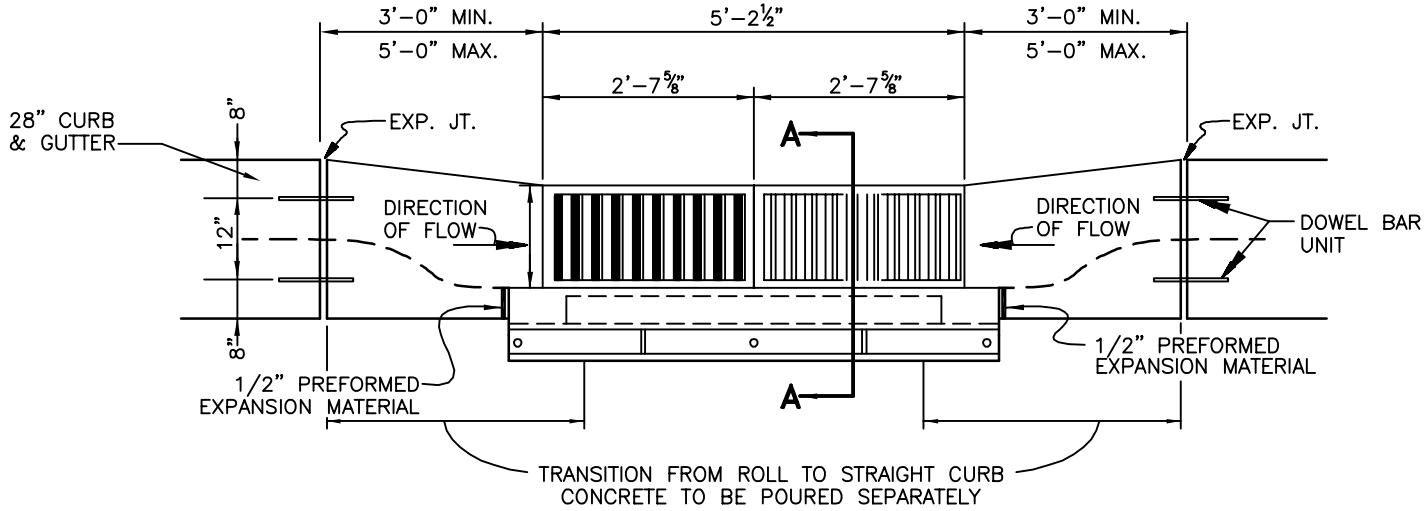

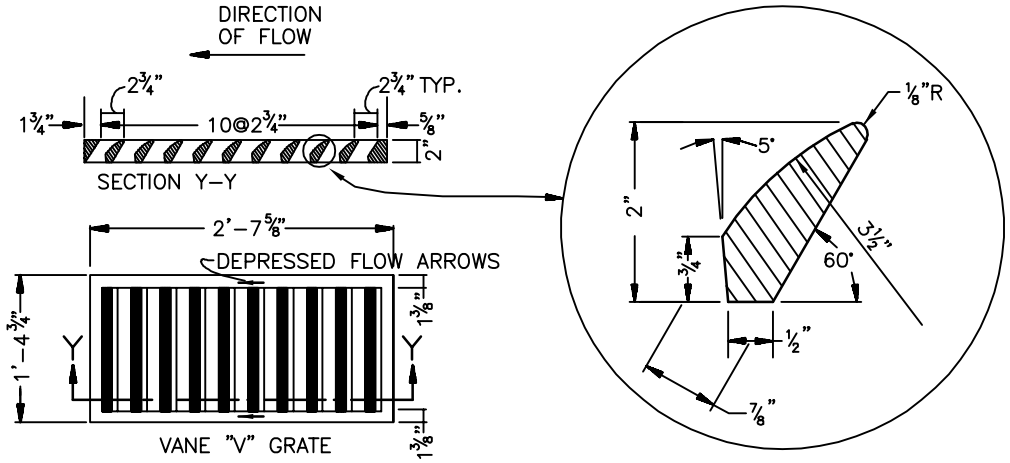

NOTE: FOR SECTION A–A
SEE DETAIL ON SUBDIVISION
STANDARD 14.

ALL CB-3, CB-3A, CB-3M, & CB-3-MH
CATCH BASINS SHALL USE VANE "V" GRATES.

HAMILTON COUNTY SUBDIVISION STANDARD		13
DATE	4-1-06	RLM

BLOCKOUT DETAIL
RIGID PAVEMENT

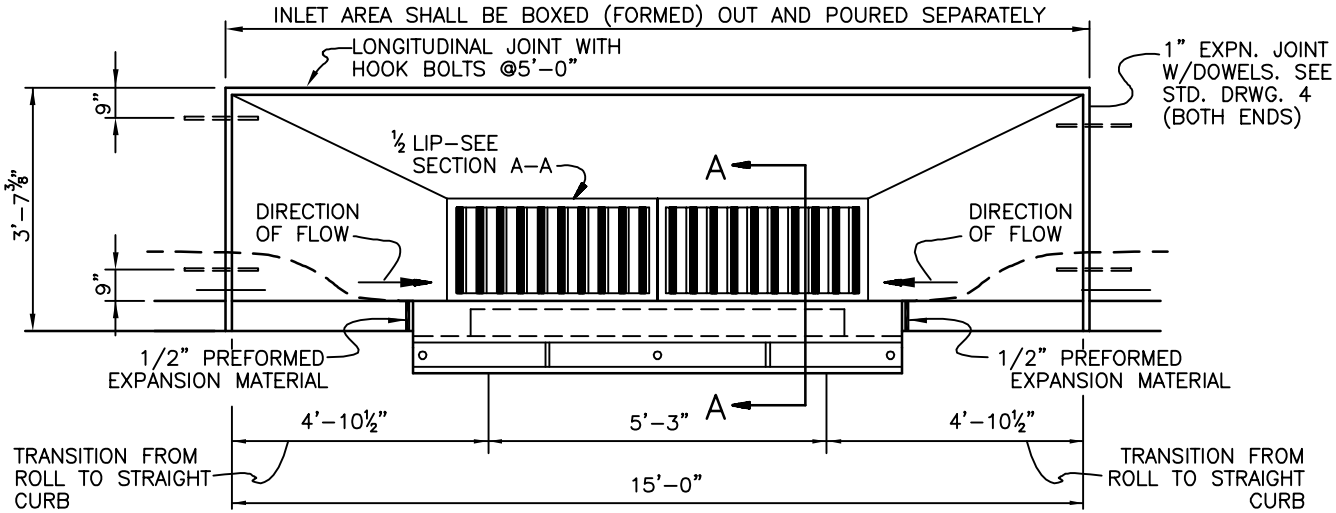

COMBINATION GUTTER INLET

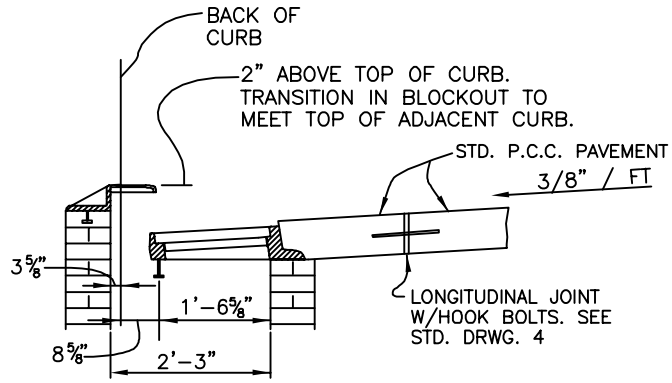

SECTION A-A

HAMILTON COUNTY SUBDIVISION STANDARD		14
DATE	4-1-06	RLM