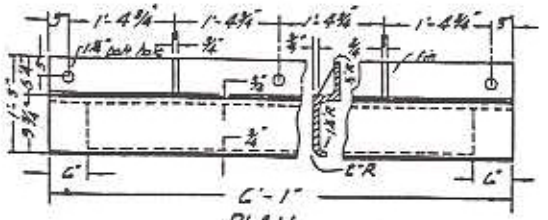

PLAN

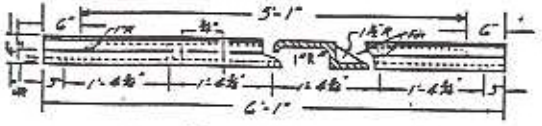

FRONT VIEW

CURB CASTING

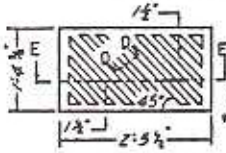

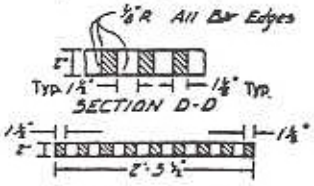

SECTION D-D

SECTION E-E

Grate Size (2 Required) 2'-5⅛" x 1'-4⅜" x 2"

STANDARD GRATE

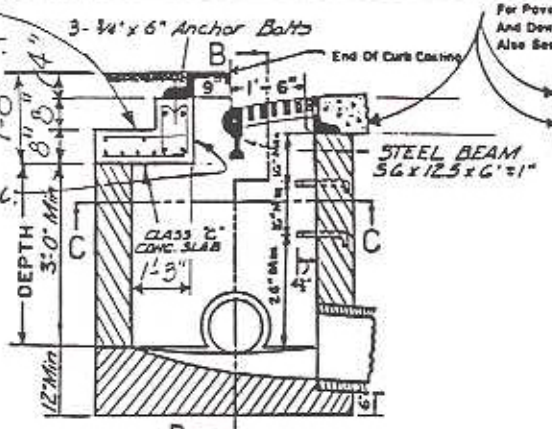

SECTION A-A

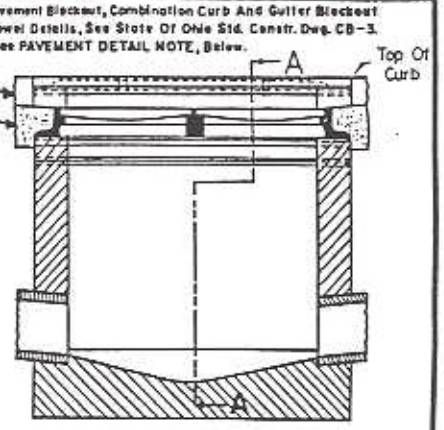

SECTION B-B

BEARING AREAS Of Frame And Grate Shall Be So Fitted And Finished, Without Projections, As To Provide A Firm And Even Seat For All Portions Of The Grate In The Frame Without Rocking.

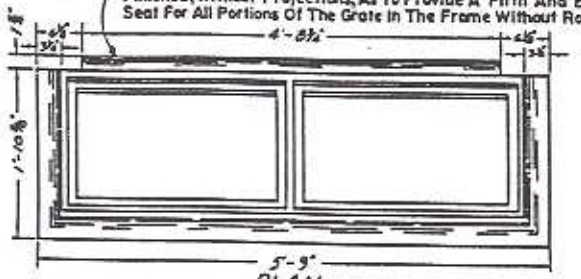

PLAN

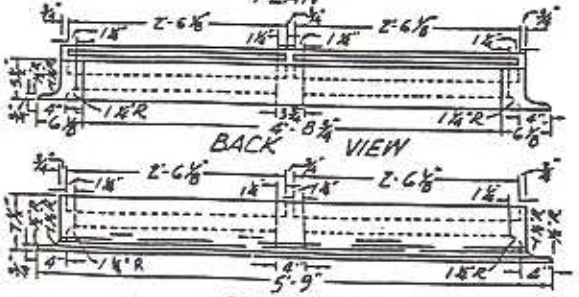

BACK VIEW

FRONT VIEW

WALL HORIZONTAL REINFORCING STEEL	
DEPTH	BAR SPACING
8 to 12'	#5 @ 12"
12' to 16'	#5 @ 8"
OVER 16'	Special Design. Show Details On Plans.

NOTES:
All Bars Shall Clear Interior Face of Wall By 2". Bar Lengths Shall Be 5'-11" For Longer Side And 4'-7" For The Short Side. Vertical Reinforcing Bars Shall Be #5 And Placed 2" ± O.C. Four Of These Shall Be Located At The Corners Of The Chambers. (See Sec. C-C)

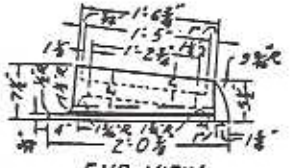

END VIEW FRAME

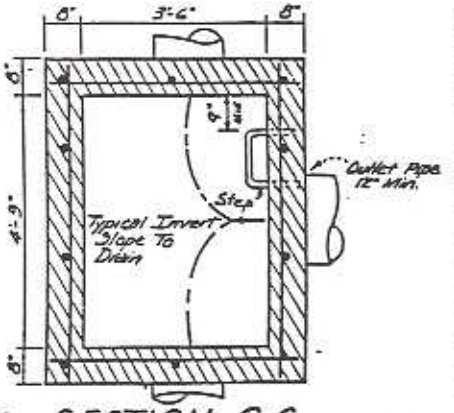

SECTION C-C

SECTION Y-Y

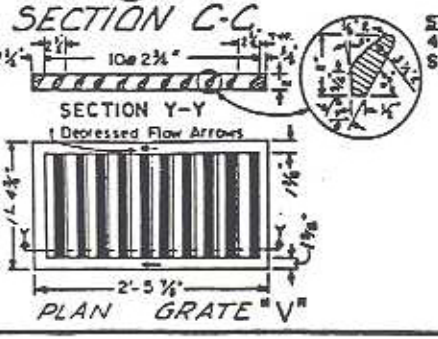

PLAN GRATE "V"

NOTES

CONCRETE SLAB May Be Precast With Lift Holes 12" From Each End. Provide Reinforcement As Shown In Section A-A.

INLET CHAMBER Shall Be Built Of Plain Concrete Or Brick Masonry In Accordance With Item 604 For Depths Of 8' Or Less. Inlet Chamber Shall Be Precast Or Cast-In-Place Concrete In Accordance With Item 604.08 For Depths Greater Than 8'. Reinforcement Shall Be In Accordance With Details On This Sheet.

PAVEMENT DETAIL Shall Be In Accordance With Agency Having Jurisdiction Where Variances From The State Of Ohio Std. Constr. Dwg. CB-3 Occur.

STANDARD GRATE Shown In The Plan View Shall Be Provided Unless The Plans Specifically Require Grate "V". Place Grate So That The Diagonal Bars Direct Drainage Flow Toward The Curb. All Bar Edges To Be Rounded ⅛" Radius.

CASTING Shall Be Essentially The Same And Equally As Strong As Those Shown Hereon. Minimum Weights Are: Curb Casting 305 lbs., Two Grates 254 lbs., Frame 590 lbs. And Two "V" Grates 210 lbs.

STEPS Shall Be Provided Where The Depth Exceeds 4'-0" And Shall Meet The Requirements Of The State Of Ohio Std. Constr. Dwg. MH-1.

PLATE 10

SANITARY DEPARTMENT
HAMILTON COUNTY OHIO

MODIFIED CATCH BASIN

1-1-70
8-3-81
4-7-83
1-1-94

STANDARD CONSTRUCTION DRAWING CB 3-M