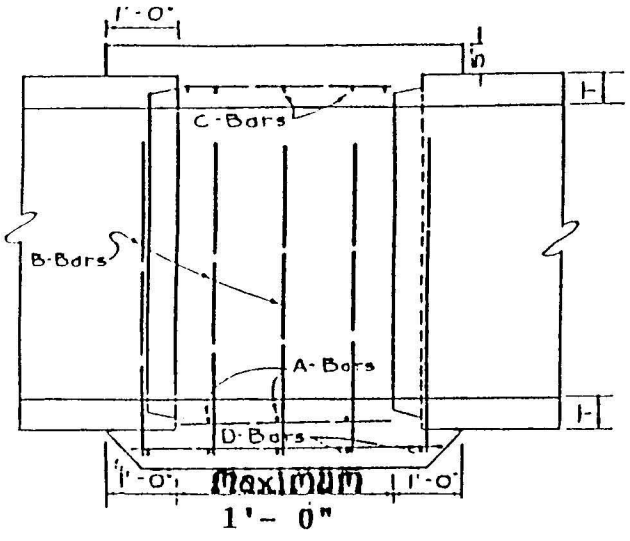

SECTION A-A

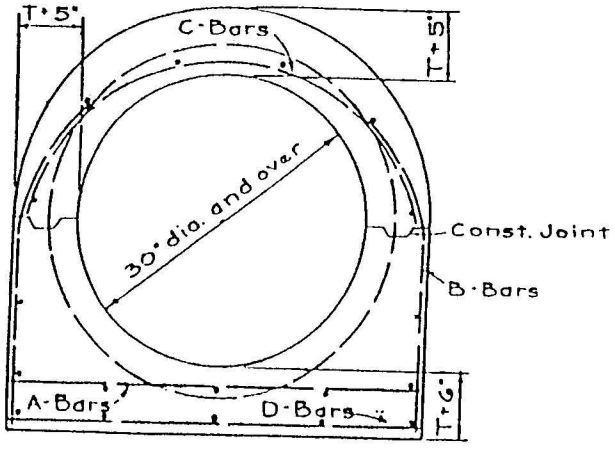

OPTIONAL
SECTION B-B

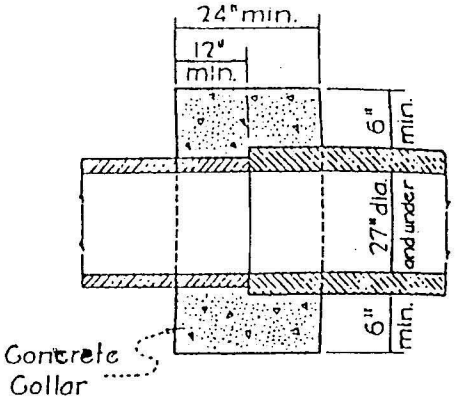

TYPE "A"

A-B-C- and D Bars @ 12" O.C.

A-B-C- { #5 Bars for 30" to 60" Sewers
#6 Bars for 66" to 78" Sewers
#7 Bars for 84" to 108" Sewers

D-Bar #5 Bars for 30" to 108" Sewers
Not less than 3 transverse bars in any gap.
All longitudinal steel #5 Bars @ 18" O.C.

Invert Steel - 3" cl.
All other Steel - 2" cl.
Bar Lap - 30 times the bar diameter

Concrete shall be Class "C"

TYPE "B"

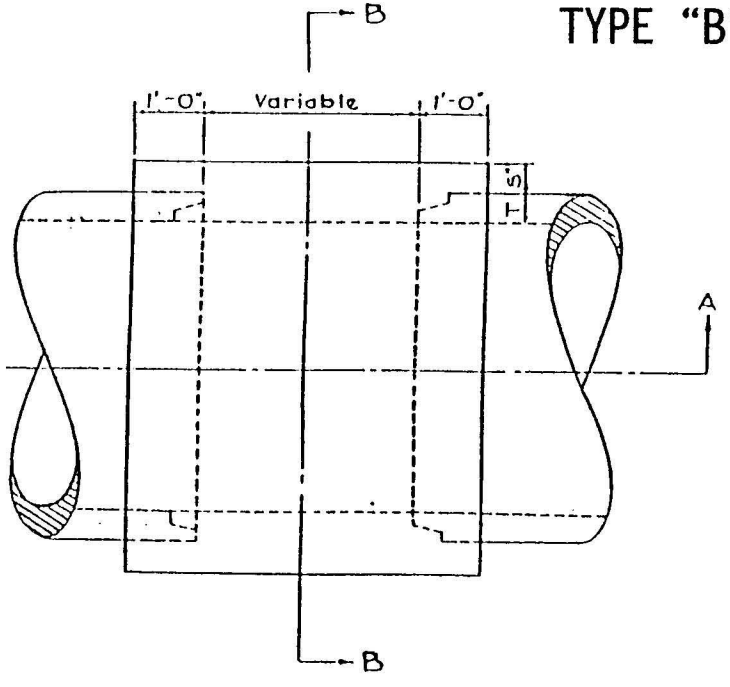

PLAN

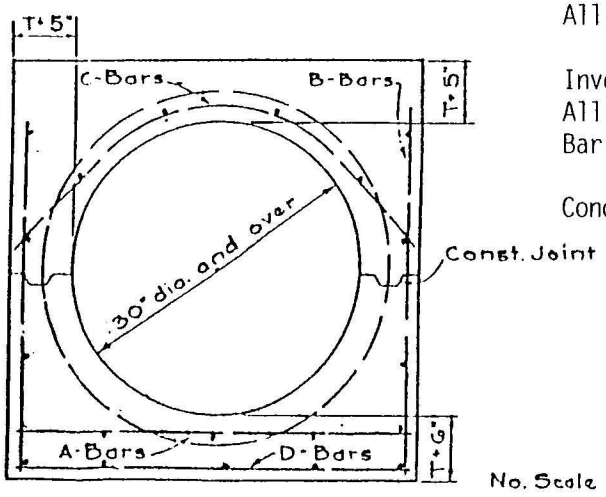

No. Scale

SECTION B-B

PLATE 12

CONCRETE COLLARS ON CONDUITS