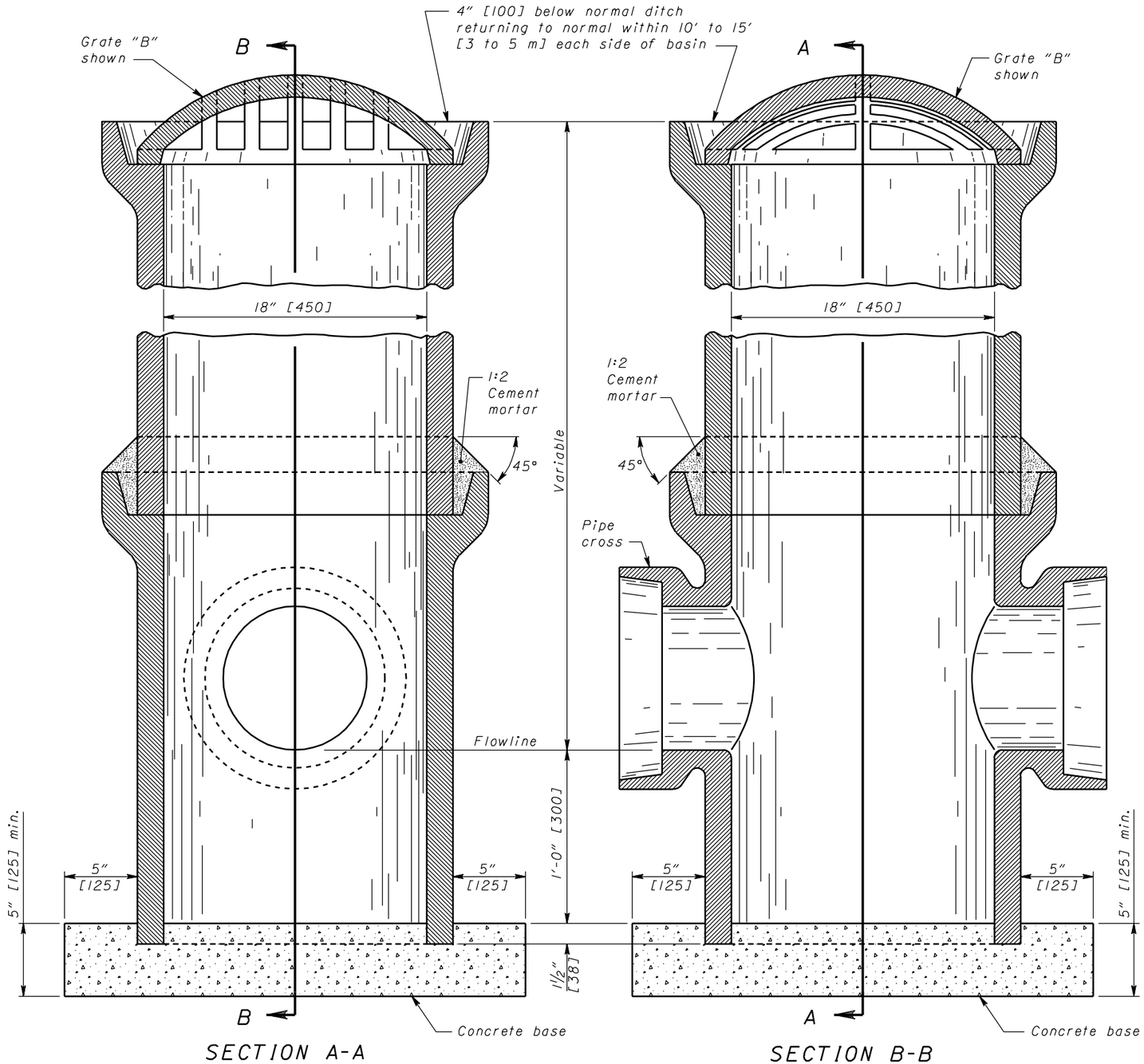

SIDE DITCH CATCH BASIN No. 7

NOTES

GENERAL: Care shall be exercised to construct the catch basin to the proper grade, and in a true vertical position No cutting of holes inside of pipe will be permitted.

GRATES: Grate "A" shall be provided unless the plans specify Grate "B".

As of January 1, 2003, the following text shall be cast into the top of the grate:

"DUMP NO WASTE" and **"DRAINS TO WATERWAY"**

Text shall be printed in bold, capital letters with a minimum height of ½". "WATERWAY" may be substituted with "STREAM", "RIVER", "LAKE", etc. Actual placement and logo may vary per manufacturer.

CASTINGS: Castings shall meet the requirements of CMS 604. The design shall be essentially the same and equally as strong as the one shown. Minimum weight [mass] shall be 70 lbs. [31.5 kg] for Grate "A", and 75 lbs. [34 kg] for Grate "B".

Lighter weight grates that meet the requirements of CMS 711.14 may also be provided. Grate openings and dimensions shall not differ from those shown unless otherwise shown in the plans.

PRECAST CONSTRUCTION: Permitted. Concrete shall meet the requirements of CMS 706.13. Reinforcing shall be sufficient to permit shipping and placement without damage.

LOCATION AND ELEVATION: When given on the plans the location is at the center of the grate. The elevation is at the lowest point on the grate.

CONCRETE BASE: Bases are to be Class C.

CROSS: Where the sewer line is not continuous through a catch basin, the upstream opening of the cross shall be properly plugged using a vitrified or concrete stopper and a sealed joint.

RISER AND CROSS: Shall be constructed of standard strength vitrified clay pipe, standard strength non-reinforced concrete pipe having bell and spigot ends, or precast as noted above.

RISER PIPE: Diameter shall be 18" [450] regardless of size of sewer pipe.

PAYMENT: All materials and labor, including excavation and backfilling, shall be paid for under **Item 604 - Catch Basin, No. 7.**

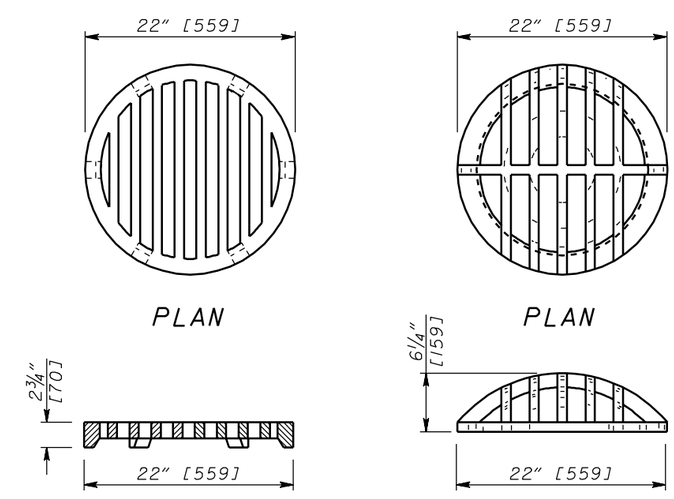

GRATE "A"

All edges to be rounded

GRATE "B"

OHIO DEPARTMENT OF TRANSPORTATION

ENGINEER OF BRIDGES

DATE 7-20-01 7-19-02

HYDRAULIC ENGINEER D. Gruver

All metric dimensions (in brackets [ ]) are in millimeters unless otherwise noted.

OFFICE OF STRUCTURAL ENGINEERING

STANDARD HYDRAULIC CONSTRUCTION DRAWING

SIDE DITCH CATCH BASIN No. 7

NUMBER CB-4.1

1 / 1