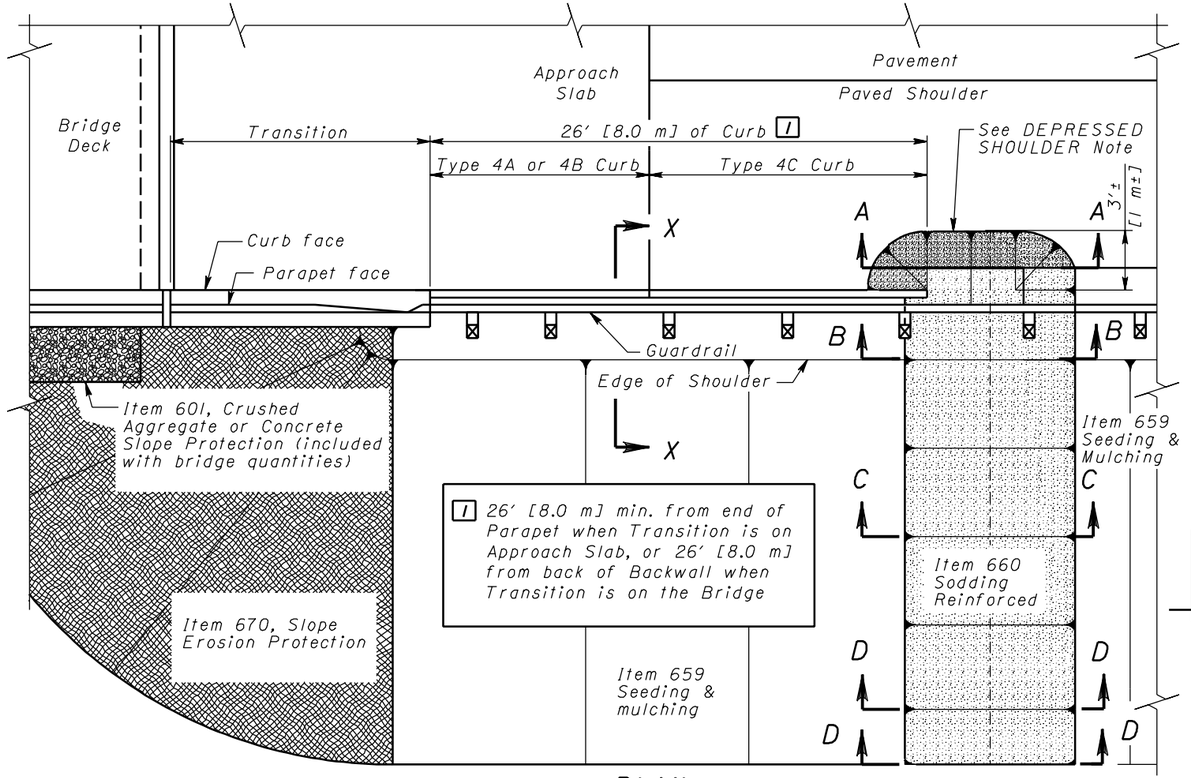

PLAN

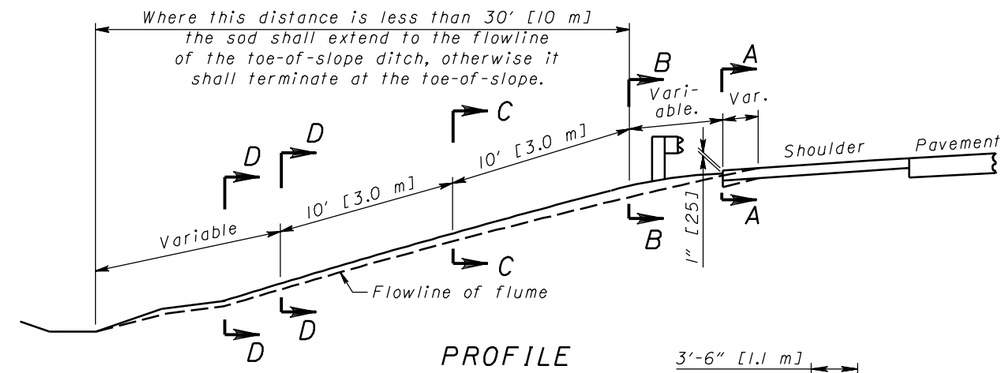

PROFILE

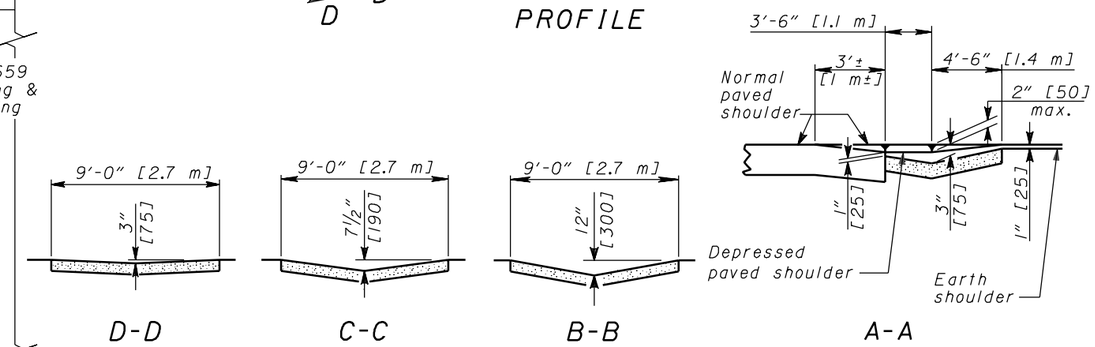

CROSS SECTIONS

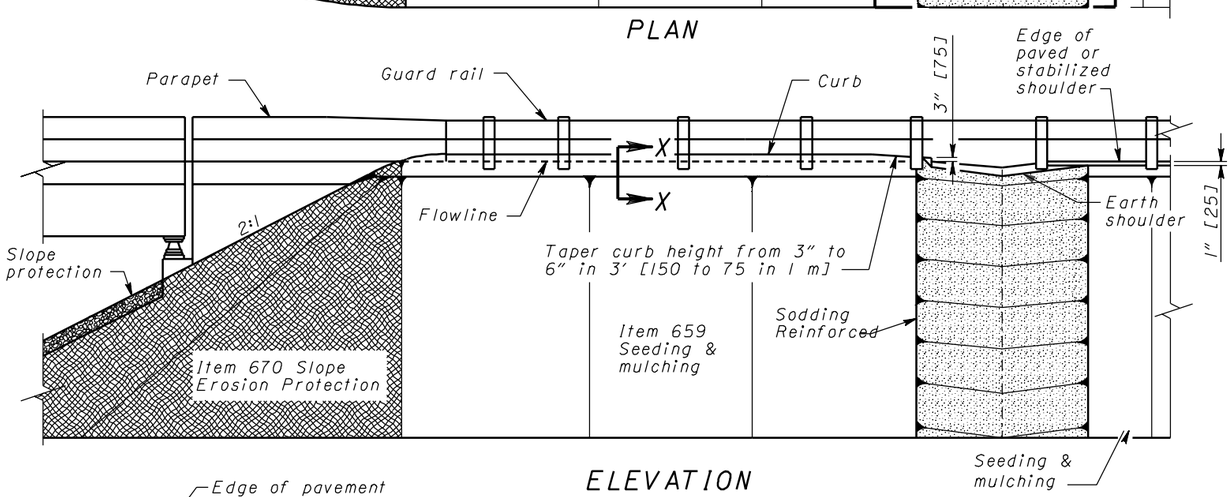

ELEVATION

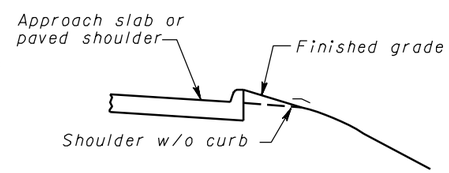

SECTION X-X

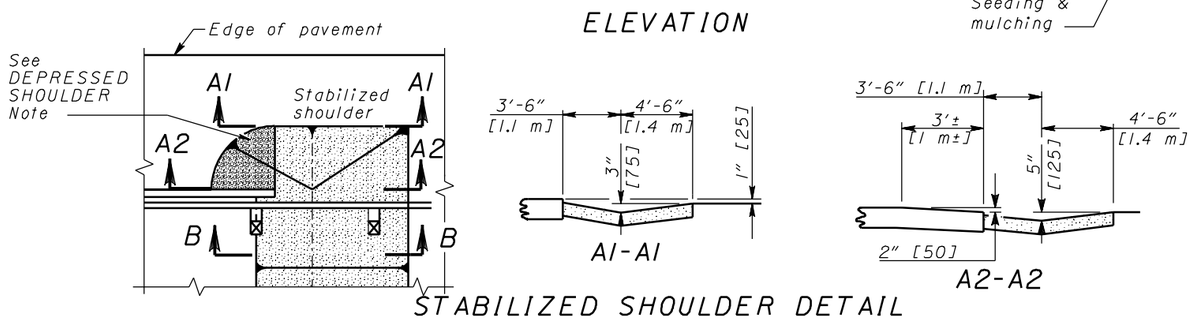

STABILIZED SHOULDER DETAIL

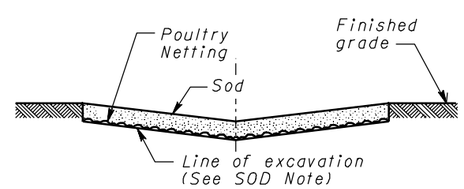

SOD INSTALLALLATION DETAIL

NOTES

DEPRESSED SHOULDER: This portion of the shoulder shall be depressed to ensure positive drainage into the sodded flume. It is especially important in the shoulder area to excavate and shape the subgrade according to the cross-sections.

PLACING REINFORCED SODDING: Prior to placing the sod, galvanized poultry netting shall be placed on the finished subgrade. The netting shall be 4' [1.2 m] wide, poultry netting or equivalent, with 2" [50] mesh and No. 20 gage minimum wire. Each strand shall be staked securely to the subgrade by using T-shaped pins or 1"x1"x8" [25x25x200] wood stakes. The stakes or pins shall be placed at 4' [1.2 m] intervals on the top and bottom and in rows 4' [1.2 m] apart. Fasten the poultry netting to the wood stakes with staples. Where the sodding is from 8' to 9' [2.5 to 3.0 m] wide, two strands of netting for a total width of 8' [2.5 m] is permitted.

SOD: Sod shall be laid in accordance with CMS 660. Special care shall be taken to excavate the sod bed to a proper depth so that the sod is flush with the surrounding grade.

PAYMENT: Payment for all the above shall be included in the unit price bid for **Item 660, Sodding Reinforced, Square Yard [Square Meter].**

OHIO DEPARTMENT OF TRANSPORTATION
ENGINEER OF BRIDGES

DATE
7-20-01
7-19-02

HYDRAULIC ENGINEER
D. Gruver

All metric dimensions (in brackets [ ]) are in millimeters unless otherwise noted.

OFFICE OF STRUCTURAL ENGINEERING

STANDARD HYDRAULIC CONSTRUCTION DRAWING
EROSION CONTROL AT BRIDGES

NUMBER
DM-4.1

1 / 1