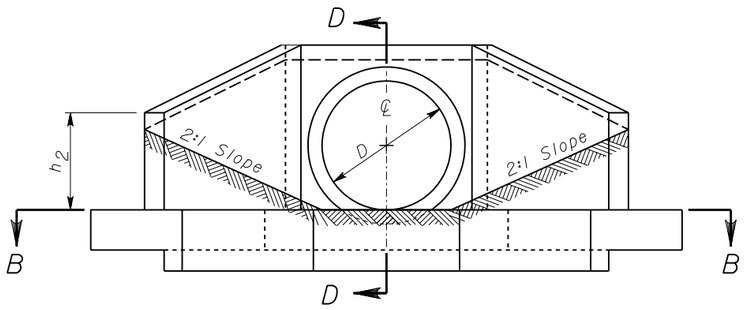

ELEVATION

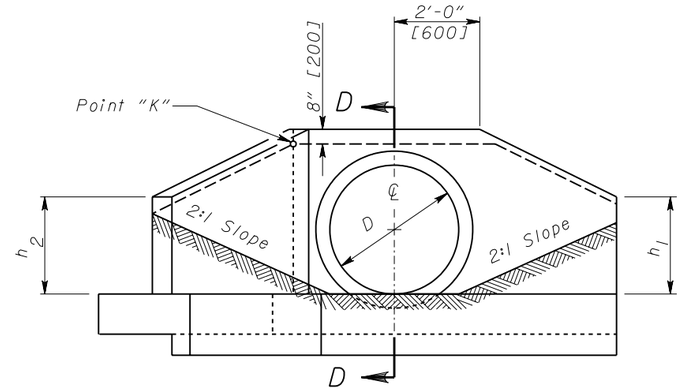

ELEVATION

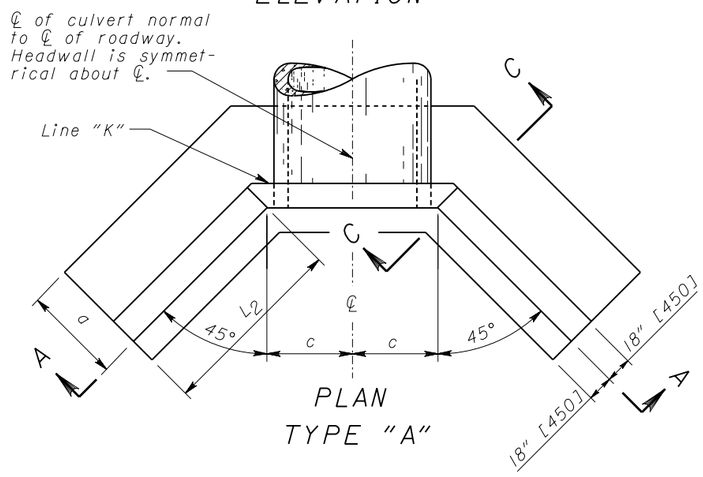

PLAN
TYPE "A"

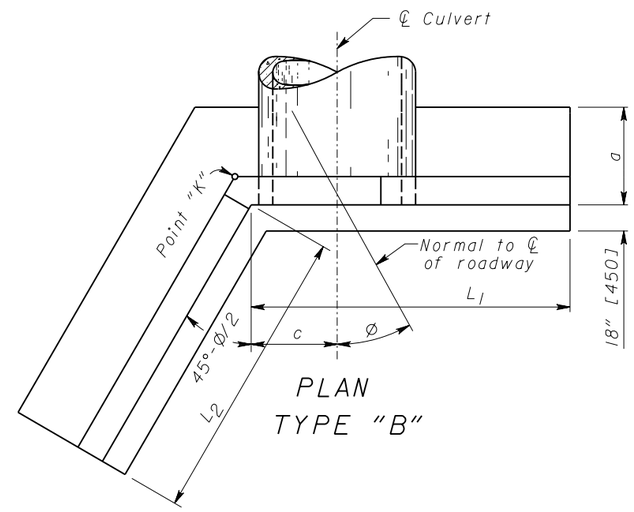

PLAN
TYPE "B"

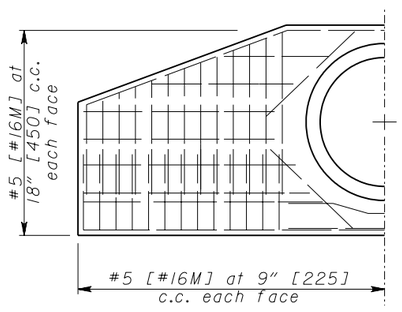

HALF-SECTION A-A

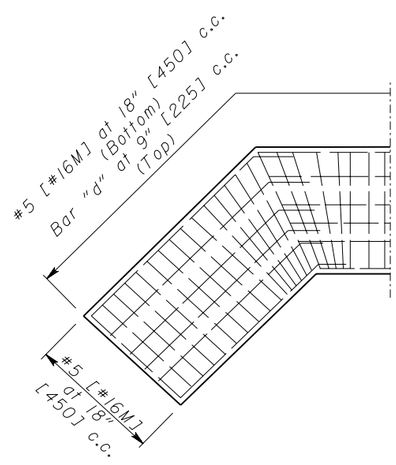

HALF-SECTION B-B

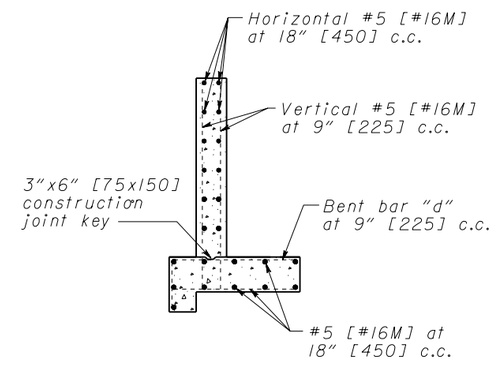

SECTION C-C

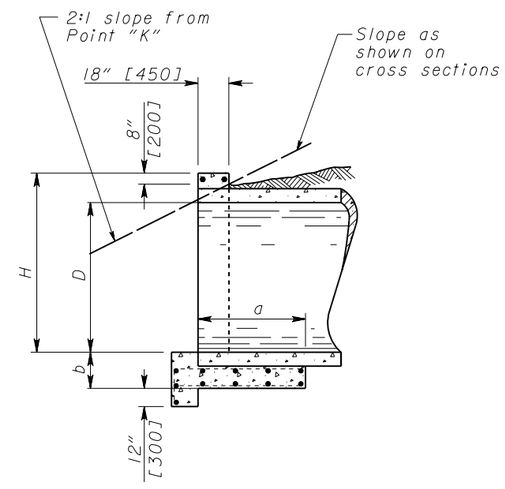

SECTION D-D

NOTES

APPLICATION: Full-Height Headwalls shall be provided for skewed and non-skewed culverts having a diameter or rise of 42" [1050] to 84" [2100] inclusive. Type "A" is used when the skew angle (Ø) is ten degrees or less and Type "B" when the skew angle is over ten degrees.

CONCRETE: Concrete shall be Class C.

REINFORCING STEEL: Bars shall be #5 [#16M] and epoxy coated.

DETAILS AND QUANTITIES: Are shown for circular sections only. When used with reinforced elliptical concrete pipe or corrugated metal pipe arches, it will be necessary to adjust dimensions and quantities to conform to those listed for the nearerst size circular pipe. The dimensions established by vertical diameter shall apply to rise, and dimensions established by horizontal diameter shall apply to span. All calculated dimensions shall be rounded to the nearest 1" [25]. Chamfer all exposed corners ¾" [19].

FOUNDATION: Where the soil borings indicate a bearing capacity of less than 2,600 pounds per square foot [125 kPa], it will be necessary to increase the width of the footing.

HEADWALL LOCATION: To be determined by the intersection of the embankment slope at the back of the headwall at Point "K". The slopes adjacent to the headwall shall be 2:1.

PAYMENT: Item 602 Concrete Masonry includes reinforcing.

OHIO DEPARTMENT OF TRANSPORTATION
STATE HYDRAULIC ENGINEER — DATE 1-21-05

REVISIONS 1-21-05

HYDR. ENGR. J. Syar — DRAWN D. Focke

All metric dimensions [in brackets] are in millimeters unless otherwise noted.

OFFICE OF STRUCTURAL ENGINEERING

STANDARD HYDRAULIC CONSTRUCTION DRAWING

FULL-HEIGHT HEADWALLS

NUMBER HW-1.1

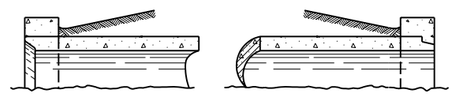

INLET END
GROOVE OR BELL UPSTREAM

OUTLET END

RIGID PIPE

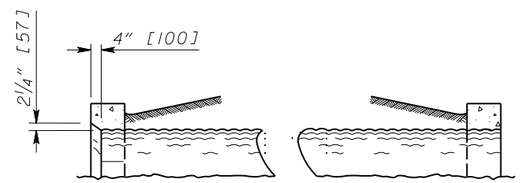

INLET END OUTLET END

CORRUGATED PIPE
END TREATMENT OF HEADWALL

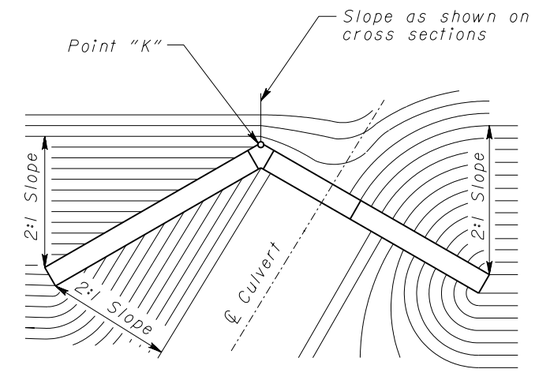

LOCATION AND GRADING PLAN FOR
SKEWED PIPE CULVERT - TYPE B

FULL-HEIGHT HEADWALLS (English)

PIPE DIA. D	H	a	b	c	Bar # d	Ø ≈ 0°					Ø ≈ 15°							Ø ≈ 30°							Ø ≈ 45°							PIPE DIA. D
						L_2	h_2	Conc. CMP (cy)	Conc. RCP (cy)	Steel (lbs.)	L_1	L_2	h_1	h_2	Conc. CMP (cy)	Conc. RCP (cy)	Steel (lbs.)	L_1	L_2	h_1	h_2	Conc. CMP (cy)	Conc. RCP (cy)	Steel (lbs.)	L_1	L_2	h_1	h_2	Conc. CMP (cy)	Conc. RCP (cy)	Steel (lbs.)	
42"	4'-11"	3'-3"	1'-6"	2'-6"	#5	3'-7"	3'-1"	7.0	6.7	598	8'-9"	4'-6"	3'-8"	3'-2"	7.3	7.1	619	7'-10"	5'-9"	3'-2"	3'-3"	7.5	7.3	633	7'-10"	7'-9"	3'-2"	3'-3"	8.7	8.5	718	42"
48"	5'-5"	3'-6"	1'-6"	2'-9"	#5	4'-4"	3'-4"	8.5	8.2	793	10'-0"	5'-4"	4'-1"	3'-5"	9.0	8.7	776	8'-9"	6'-10"	3'-5"	3'-6"	9.1	8.8	801	8'-9"	9'-2"	3'-5"	3'-7"	10.6	10.3	925	48"
54"	5'-11"	3'-9"	1'-6"	3'-0"	#5	5'-2"	3'-8"	10.3	10.0	1,069	11'-4"	6'-3"	4'-6"	3'-8"	10.9	10.5	1,026	9'-8"	7'-11"	3'-8"	3'-9"	10.8	10.5	1,024	9'-8"	10'-7"	3'-8"	3'-10"	12.6	12.2	1,188	54"
60"	6'-6"	4'-0"	1'-6"	3'-3"	#5	5'-11"	3'-11"	12.3	11.8	1,149	12'-7"	7'-2"	4'-10"	4'-0"	12.9	12.4	1,174	10'-7"	9'-0"	3'-10"	4'-1"	12.7	12.3	1,157	10'-7"	12'-0"	3'-10"	4'-1"	14.8	14.3	1,354	60"
72"	7'-7"	4'-6"	1'-7"	3'-9"	#7	7'-5"	4'-5"	17.0	16.2	1,783	15'-1"	8'-11"	5'-7"	4'-6"	17.8	17.1	1,811	12'-5"	11'-2"	4'-3"	4'-7"	17.3	16.6	1,788	12'-5"	14'-10"	4'-3"	4'-8"	20.2	19.6	2,076	72"
84"	8'-8"	5'-0"	1'-10"	4'-3"	#8	9'-0"	5'-0"	23.7	22.8	2,595	17'-7"	10'-9"	6'-4"	5'-1"	24.8	23.9	2,596	14'-7"	13'-4"	4'-10"	5'-2"	24.1	23.3	2,511	14'-3"	17'-8"	4'-8"	5'-2"	27.9	27.0	2,990	84"

FULL-HEIGHT HEADWALLS (Metric)

PIPE DIA. D	H	a	b	c	Bar # d	Ø ≈ 0°					Ø ≈ 15°							Ø ≈ 30°							Ø ≈ 45°							PIPE DIA. D
(mm)	(mm)	(mm)	(mm)	(mm)		L_2 (mm)	h_2 (mm)	Conc. CMP (m^3)	Conc. RCP (m^3)	Steel (kg)	L_1 (mm)	L_2 (mm)	h_1 (mm)	h_2 (mm)	Conc. CMP (m^3)	Conc. RCP (m^3)	Steel (kg)	L_1 (mm)	L_2 (mm)	h_1 (mm)	h_2 (mm)	Conc. CMP (m^3)	Conc. RCP (m^3)	Steel (kg)	L_1 (mm)	L_2 (mm)	h_1 (mm)	h_2 (mm)	Conc. CMP (m^3)	Conc. RCP (m^3)	Steel (kg)	(mm)
1050	1500	1000	450	750	#16M	1100	950	5.73	5.12	271	2675	1375	1125	975	5.58	5.43	281	2400	1750	975	1000	5.73	5.58	287	2400	2350	975	1000	6.65	6.5	326	1050
1200	1650	1075	450	850	#16M	1325	1025	6.5	6.27	360	3050	1625	1250	1050	6.88	6.65	352	2675	2075	1050	1075	6.96	6.73	363	2675	2800	1050	1100	8.1	7.87	420	1200
1350	1800	1150	450	925	#16M	1575	1125	7.87	7.65	485	3450	1900	1375	1125	8.33	8.03	465	2950	2425	1125	1150	8.26	8.03	464	2950	3225	1125	1175	9.63	9.33	539	1350
1500	1975	1225	450	1000	#16M	1800	1200	9.4	9.02	521	3825	2175	1475	1225	9.86	9.48	533	3225	2750	1175	1250	9.71	9.4	525	3225	3650	1175	1250	11.3	10.9	614	1500
1800	2300	1375	475	1075	#22M	2250	1350	13	12.4	809	4600	2725	1700	1375	13.6	13.1	821	3775	3400	1300	1400	13.2	12.7	811	3775	4525	1300	1425	15.4	15.0	942	1800
2100	2650	1525	550	1300	#25M	2750	1525	18.1	17.4	1177	5350	3275	1925	1550	19	18.3	1178	4450	4075	1475	1575	18.4	17.8	1139	4350	5375	1425	1575	21.3	20.6	1356	2100

OHIO DEPARTMENT OF TRANSPORTATION
STATE HYDRAULIC ENGINEER — 1-21-05 DATE

REVISIONS 1-21-05

HYDR. ENGR. J. Syar
DRAWN D. Focke

All metric dimensions (in brackets [ ]) are in millimeters unless otherwise noted.

OFFICE OF STRUCTURAL ENGINEERING

STANDARD HYDRAULIC-CONSTRUCTION DRAWING
FULL-HEIGHT HEADWALLS

NUMBER HW-1.1