# Geotechnical Exploration – Revised
# Van Blaricum Road Improvements
# Hamilton County, Ohio
# S&ME Project No. 1178-17-011

PREPARED FOR:

**Hamilton County Engineer's Office**
**138 E. Court Street**
**Cincinnati, OH 45202**

PREPARED BY:

**S&ME, Inc.**
**862 E Crescentville Road**
**Cincinnati, OH 45246**

**March 30, 2018**

March 30, 2018

Hamilton County Engineer's Office
138 E. Court Street
Cincinnati, OH 45202

Attention: Mr. Todd Gadbury, P.E.

Reference: **Geotechnical Exploration - Revised**
**Van Blaricum Road Improvements**
Hamilton County, Ohio
S&ME Project No. 1178-17-011

Dear Mr. Gadbury:

In accordance with our proposal dated July 21, 2017, which was formally authorized on July 25, 2017, S&ME, Inc. (S&ME) has completed a Subgrade and Subsurface Exploration for the planned culvert replacement and roadway improvement project near Addyston, Hamilton County, Ohio. The location is shown on the Vicinity Map submitted as Plate 1 in Appendix I of this report. This final report contains the information obtained from the borings and laboratory testing as well as analyses and recommendations for design, support and construction of the roadway and culvert replacement.

We appreciate having been given the opportunity to be of service on this report. Please do not hesitate to contact our office if you have any questions concerning our report.

Respectfully submitted,

**S&ME, Inc.**

Ben Dusina
Mar 30 2018 3:20 PM

Andrew S. Dingler, E.I.
Staff Professional

Benjamin C. Dusina, P.E.
Senior Engineer

Submitted: 1 electronic to Mr. Todd Gadbury, P.E. (Todd.Gadbury@Hamilton-Co.Org)
1 electronic copy to Mr. Nick Yeretzian, P.E. (Nick.Yeretzian@kleingers.com)

# Table of Contents

**1.0 Introduction ..... 1**

**2.0 Geology and Observations of the Project ..... 1**

2.1 Regional Geology ..... 1

2.2 Site Reconnaissance ..... 1

**3.0 Exploration and Laboratory Program ..... 2**

3.1 Available Information ..... 2

3.2 Field Exploration Program ..... 2

3.3 Laboratory Testing Program ..... 3

**4.0 Exploration Findings ..... 4**

4.1 General Subsurface Conditions ..... 4

4.2 Groundwater Observations ..... 4

**5.0 Analyses and Recommendations ..... 5**

5.1 Subgrade Recommendations ..... 5

*5.1.1 Subgrade Support Parameters ..... 5*

*5.1.2 Unsuitable Subgrade Materials ..... 5*

*5.1.3 Subgrade Remediation Considerations ..... 6*

5.2 Earthen Embankment Construction ..... 6

*5.2.1 Embankment Foundation Preparation ..... 6*

*5.2.2 Borrow Requirements and Compaction Criteria ..... 7*

*5.2.3 Compaction/Moisture Conditioning Concerns ..... 8*

*5.2.4 Subgrade Preparation ..... 8*

5.3 Culvert Replacement Recommendations ..... 8

*5.3.1 General Discussion ..... 8*

*5.3.2 Site Preparation ..... 8*

*5.3.3 Culvert Bearing Resistance ..... 8*

*5.3.4 Eccentricity (Overturning) ..... 9*

*5.3.5 Sliding Resistance ..... 10*

*5.3.6 Bedrock Excavation Considerations ..... 10*
*5.3.7 Scour Countermeasures ..... 11*
*5.3.8 Lateral Earth Pressures ..... 11*
5.4 Retaining Wall Design ..... 12
**6.0 Follow-up Services ..... 12**
**7.0 Final Considerations ..... 13**

## List of Tables

Table 3-1 – Summary of Unconfined Compressive Strength Testing ..... 3
Table 4-1 – Summary of Subsurface Conditions ..... 4
Table 5-1 – Recommended Bearing Capacities ..... 9
Table 5-2 – Soldier Pile Retaining Wall Summary ..... 12

## Appendices

Appendix I – Additional Figures
Appendix II – Boring Logs
Appendix III – Laboratory Testing Results
Appendix IV – Site Reconnaissance Photographs
Appendix V – Retaining Wall Design Drawings

# 1.0 Introduction

Based on discussion with Hamilton County Engineer's Office (HCEO) and information received from The Kleingers Group, Inc. (Kleingers), S&ME understands that a large sinkhole was created by the partial collapse of a culvert below a section of Van Blaricum Road in Hamilton County, Ohio. The sinkhole has caused the HCEO to close this portion of Van Blaricum Road. S&ME performed a site reconnaissance on July 18, 2017 to observe the current conditions. The existing sinkhole has encroached into the roadway pavement. Several large erosion features were observed, and pavement cracking and overturned trees (indicating possible slope instability) was also observed.

S&ME met with Mr. Nick Yeretzian, P.E. with Kleingers on July 19, 2017 to discuss the proposed repair options and scope of geotechnical services needed. Based on this discussion, we understand that the existing arch structure below Van Blaricum Road will be replaced with a new 4-sided box culvert with wing walls, and existing pipe culvert in the channel west of Van Blaricum Road will be removed and the natural stream will be restored. The roadway alignment will also be shifted to the west to position it within the existing County right-of-way. Since Kleingers' 65 percent design submittal to Hamilton County, S&ME was asked to evaluate and design a drilled shaft and cantilever retaining wall along the western portion of the new roadway.

We understand that the existing pavement for this section will be replaced and the sinkhole backfilled.

# 2.0 Geology and Observations of the Project

## 2.1 Regional Geology

According to available sources, the project is located within the Outer Bluegrass physiographic region of the state. The overburden soils in the area consist predominantly of glacially deposited ground moraine, and silt-loam colluvium consisting of silt, clay, sand and gravel, and roadway embankment fill. These overburden soils overlie interbedded shale and limestone from the Waynesville Formation and Arnheim formation undivided of the Ordovician age. The bedrock consists of approximately 60 to 70 percent shale and ranges in thickness from 140 to 220 feet thick.

A review of the ODNR "Ohio Karst Areas" map and the "Abandoned Underground Mines of Ohio" map reveal that no mapped karst deposits or mapped abandoned underground mines are present in the vicinity of the site.

## 2.2 Site Reconnaissance

A site reconnaissance visit was made by S&ME personnel on July 18, 2017 to field locate and mark the borings. A secondary sinkhole north of the primary sinkhole along the line of the culvert pipe between the stream running along Van Blaricum Road to the primary sinkhole was observed. Slight pavement cracking in the shoulder adjacent to the stream was observed. Erosion features in the slope west of Van Blaricum Road and within the asphalt of the roadway were observed. Photographs of the site conditions prior to drilling are provided in Appendix IV to this report. A photograph of the sinkhole showing the original arch structure below Van Blaricum Road is provided on the following page. Additional site photographs are included in Appendix IV to this report.

Date: 7/18/2017

Photographer: BCD

| | |
|---|---|
| **Location / Orientation** | 39° 7'47.22"N; 84°40'46.47"W / Looking East |
| **Remarks** | Sinkhole adjacent to roadway |

# 3.0 Exploration and Laboratory Program

## 3.1 Available Information

S&ME performed a search of the ODOT Office of Geotechnical Engineering's on-line Geotechnical Document Management System database and the ODOT Office of Structural Engineering on-line database for historic records or data that might be incorporated into the current exploration program. No additional nearby borings were found.

## 3.2 Field Exploration Program

On July 31 and August 1, 2017, six (6) borings designated as B-001 through B-006 were performed to investigate the existing soils below the proposed box culvert and roadway improvements. The borings were located within the right-of-way of Van Blaricum road and to the west along the existing pipe culvert and existing stream. Borings were advanced to depths ranging from 10.0 feet to 25.5 feet. The soil boring locations were staked by S&ME using a hand held GPS unit (sub-meter horizontal accuracy). The ground surface elevations at the boring locations were estimated from topographic information provided by Kleingers.

The borings were performed with a CME 55 rubber track mounted drill rig using a $3^1/_4$-inch O.D. hollow continuous flight auger to advance the borings between sampling attempts. Disturbed, but representative soil samples were attempted continuously to a depth of 20.5 feet beneath the existing pavement subgrade at boring B-003, and at regular intervals in the other borings. This sampling was done by lowering a 2-inch O.D. split-barrel sampler to the bottom of the boring within the auger, and then driving the sampler into the soil with blows from a 140-pound hammer freely falling 30 inches (ASTM D1586 - Standard Penetration Test). As required by the ODOT SGE, the hammer system on the drilling rig has been calibrated in accordance with ASTM D 4633 to determine the drill rod energy ratio. SPT samples were examined immediately after recovery and representative portions were preserved in airtight glass jars. Upon reaching auger refusal, 5 feet of rock core was drilled at borings B-001 through B-004. Upon completion of each boring, the boreholes were backfilled with cuttings. A Plan of Borings showing the approximate locations of the borings is included as Plate 2 of Appendix II.

In the field, experienced personnel from S&ME supervised the drilling as well as performing the following specific duties: preserved all recovered samples; prepared a log of each boring; made seepage and groundwater observations; obtained hand-penetrometer measurements in soil samples exhibiting cohesion; and, contacted the Project Engineer so that the program of explorations could be modified, if necessary, because of unanticipated conditions. All samples were transported to the laboratory of S&ME for further identification and testing.

## 3.3 Laboratory Testing Program

In the laboratory, soil samples were visually identified and tested for natural moisture content. Grain-size analyses, liquid/plastic limit determinations, and unconfined compressive strength testing was performed on selected representative soil specimens. Unconfined compressive strength tests were performed on two (2) representative bedrock samples. The results of these tests permit an evaluation of the strength, and compressibility characteristics of the soils and bedrock encountered at this site by comparison with similar soils for which these characteristics have been previously determined. The results of some of the laboratory index and strength tests are shown on individual boring logs as well.

Based on the results of the laboratory testing program, soil descriptions contained on the field logs were modified, as necessary, and laboratory-corrected boring logs are included as Plates 3 through 8 in Appendix II. Shown on these logs are: descriptions of the soil stratigraphy encountered; depths from which samples were preserved; sampling efforts (blow-counts) required to obtain the specimens in the borings; calculated N60 value; seepage and groundwater observations; and, values of hand-penetrometer measurements made in soil samples exhibiting cohesion. For your reference, hand-penetrometer values are roughly equivalent to the unconfined compressive strength of the cohesive fraction of the soil sample.

### Table 3-1 – Summary of Unconfined Compressive Strength Testing

| Boring Number | Sample Depth (ft) | Soil/Bedrock Description | Unconfined Compressive Strength (ksf) |
|---|---|---|---|
| B-001 | 21.5 – 22.2 | Shale with clay seams | 9.67 |
| B-002 | 18.1 – 18.8 | Shale with limestone | 78.8 |
| B-003 | 7.0 - 7.5 | SILTY CLAY (A-6b) | 3.00 |
| B-004 | 18.0 – 18.7 | Shale with limestone | 73.6 |

Soils have been classified in general accordance with Section 603 of the ODOT Specification for Geotechnical Engineering (SGE), and described in general accordance with Section 602. An explanation of the symbols and terms used on the boring logs, and definitions of the special adjectives used to denote the minor soil components and rock hardness, are presented on Plates 1 and 2 of Appendix II. Group indices determined from the results of the laboratory testing program are also provided on the boring logs.

# 4.0 Exploration Findings

## 4.1 General Subsurface Conditions

The subsurface stratigraphy encountered in the borings alongside Van Blaricum Road may be described as follows:

- Existing fill consisting of soft to hard SILTY CLAY (A-6b), SANDY SILT (A-4a), and CLAY (A-7-6) was encountered in each boring. A layer of soft SILTY CLAY was encountered in boring B-001. Medium-dense to dense GRAVEL SAND AND SILT (A-2-6) was encountered in borings B-002 and B-004.
- Natural overburden soils were encountered in borings B-001, B-005 and B-006. The natural overburden soils generally consisted of very-stiff SILTY CLAY (A-6b) and SILT AND CLAY (A-6a).
- Cobbles were encountered in several borings.
- Severely weathered bedrock was encountered in each of the borings.
- Bedrock encountered consisted INTERBEDDED SHALE AND LIMESTONE.

Table 4-1 below summarizes the subsurface conditions encountered.

**Table 4-1 – Summary of Subsurface Conditions**

| Boring Number | Depth of Seepage Encountered (ft) | Groundwater at Completion (ft) | Depth of Existing Fill (ft) | Depth to top of Bedrock (ft) |
|---|---|---|---|---|
| B-001 | Not Encountered | Dry Prior to Coring | 16.7 | 19.0 |
| B-002 | 16.0 | Dry Prior to Coring | 11.75 | 13.9 |
| B-003 | Not Encountered | Dry Prior to Coring | 17.5 | 17.5 |
| B-004 | Not Encountered | Dry Prior to Coring | 8.0 | 11.75 |
| B-005 | 8.5 | Dry | 8.0 | 11.5 |
| B-006 | Not Encountered | Dry | 8.0 | 8 |

For additional details, please refer to the boring logs included in Appendix A of this report.

## 4.2 Groundwater Observations

Seepage was encountered in B-002 and B-005 at approximately 16 and 8.5 feet, respectively. Groundwater measurements were made in borings B-005 and B-006 at the completion of drilling, however no groundwater was

measured at that time. Groundwater observations were not possible in B-001 through B-004 as water was used for drill fluid to obtain the bedrock core.

# 5.0 Analyses and Recommendations

## 5.1 Subgrade Recommendations

### *5.1.1 Subgrade Support Parameters*

Based on the profile information provided by Kleingers, the following average CBR, based on laboratory index testing is recommended.

CBR: 4.0%

Based on this average value, and Section 203.1 of the current ODOT Pavement Design Manual, the following value of Resilient Modulus ($M_R$) may be used during new pavement section design for this project.

$M_R$: 4,800 psi

In the event that a global chemical subgrade stabilization program, performed in accordance with ODOT Construction and Materials Specifications (CMS) Item 206 and ODOT Supplement 1120, is incorporated into this project beneath all new pavement, Section 203.4.1 of the current ODOT Pavement Design and Rehabilitation Manual permits the Resilient Modulus ($M_{R\text{-}GCS}$) value used during design of the flexible pavement to be increased by a factor of 1.36.

Based on the lab test results, S&ME recommends that a new flexible pavement constructed on a subgrade which is globally chemically stabilized may be designed using the following improved subgrade modulus:

Resilient Modulus-Global Chemical Stabilization ($M_{R\text{-}GCS}$): 6,530 psi

These subgrade support values may be used during pavement design for this project provided that the entire proposed pavement subgrade is prepared in strict accordance with ODOT Item 204, and that the borrow soil placed within 3 feet of the final subgrade level of a new fill embankment is capable of providing average subgrade support parameters which meet or exceed the above values. This subgrade evaluation also assumes that the subgrade for the new roadways is composed of the materials encountered in the borings. If, at the time of construction, it is determined that the subgrade consists of materials different than those encountered in the borings, the pavement design subgrade criteria should be reviewed and, if necessary, modified.

### *5.1.2 Unsuitable Subgrade Materials*

None of the borings performed during this exploration encountered soil within 3 feet of the proposed subgrade level which ODOT GB1 considers to be unsuitable either by classification, or which has a Liquid Limit value in excess of 65%. Relatively shallow bedrock was observed in the upslope drainage ditch.

If deposits of unsuitable soils such as silt or organic materials are encountered during any earthwork or proofrolling operations, S&ME recommends that test pits or hand sampling methods be used to further investigate and delineate the extent of these deposits. Any silt deposits present within 3 feet of the proposed subgrade level should be removed (ODOT Item 203.03.A).

Because of the variable nature of the wide spacing of the explorations, it is possible that other areas of unsuitable organic or silt materials that were not encountered in any of the borings may be encountered during earthwork and proofrolling operations. Visual observation of the proofrolling procedures by the Geotechnical Engineer of Record may potentially result in a reduction of overexcavation of unsuitable soils in these areas. Additionally, S&ME recommends that construction traffic be minimized or restricted once the planned soil subgrade level has been exposed or attained.

### *5.1.3 Subgrade Remediation Considerations*

Because of the moisture sensitive nature of the cohesive soils (A-4a, A6a, A-6b and A-7-6) encountered in the borings, S&ME recommends construction traffic be minimized once the required subgrade level has been attained. Construction traffic resulting from cyclical haul routes or limited access points may increase the quantity of soil identified by proofrolling as requiring removal, particularly during periods of moist weather.

Following removal and replacement of any unsuitable soils with properly compacted embankment fill materials, the subgrade should be proofrolled in accordance with ODOT Item 204.06, and Section 204 of the current ODOT Construction Administration Manual of Procedures to verify that the desired stability is achieved. We recommend placing ODOT Item 712.09 Geotextile Fabric Type D at the bottom of the undercuts, and ODOT Item 204 Granular Material is to be used to backfill the overexcavations. S&ME recommends that ODOT Item 204 Granular Material, Type B or C be utilized. It should also be noted, however, that ODOT GB1 specifies that Item 204 Granular Material Type B without a geotextile fabric be utilized to backfill undercuts performed in the vicinity of any underdrains.

It is also recommended that overexcavated subgrade areas backfilled with granular soil be drained to an underdrain, catch basin, or pipe. Additionally, if "excavate and replace" is to be used for remediation, Plan Note G121 from the ODOT L&D Manual, Vol. 3, should be used in the General Notes. If chemical stabilization is selected, additional pay items to be included in the plans are provided in Section G of ODOT Geotechnical Bulletin GB1.

## 5.2 Earthen Embankment Construction

Profile information provided indicates the majority of the proposed roadway will be constructed at elevations approximately the same as the existing roadway elevations. However additional embankment fill will be required to fill in around the new culvert and behind the planned retaining structure.

### *5.2.1 Embankment Foundation Preparation*

Prior to commencing earthwork operations, it is recommended that all sod, topsoil, vegetation, and other miscellaneous materials be completely removed from the entire footprint of the entire proposed roadway embankments. Following the removal of these materials, it is recommended that the entire exposed subgrade

and embankment foundation surface be examined by the Geotechnical Engineer of Record or their designated representative to identify any weak, wet, organic, or otherwise unsuitable soils that were not encountered during the subsurface investigation, especially in "at-grade" and fill embankment areas. Any such materials identified should be removed and replaced with suitable compacted fill (ODOT Item 203, or Item 204 when within 12 inches of the proposed subgrade). Recommendations for existing ditches have been previously presented in Section 6.3, "Unsuitable Subgrade Materials" of this report.

Once the desired subgrade elevation has been attained in all "cut" and "at-grade" areas, and after overexcavation of all existing unsuitable subgrade materials has been completed, the subgrade soil beneath the entire roadway and shoulder pavement area should be scarified and recompacted to a depth of 12 inches below the subgrade level in accordance with ODOT Item 204.03. During recompaction, the moisture content of the subgrade soil should be maintained or adjusted in accordance with ODOT Item 203.07.A.

Following the completion of the scarification and recompaction of the subgrade in these "cut" and "at-grade" areas, it is strongly recommended that construction traffic be restricted from traveling on the compacted subgrade until final acceptance proofrolling has been performed. Cohesive subgrade soils subjected to repeated moisture fluctuations, which may occur as a result of exposure to rainfall and/or surface water runoff, may exhibit subgrade instability.

### *5.2.2 Borrow Requirements and Compaction Criteria*

New fill should consist of inorganic soil free of all miscellaneous materials, cobbles, and boulders, which is placed in uniform, thin layers and then compacted in accordance with either Item 203, *"Roadway Excavation and Embankment"*, or when within 12 inches of the proposed subgrade level, Item 204 *"Subgrade Compaction and Proofrolling"*, of the ODOT CMS. Borrow materials should not be placed in a frozen condition or upon a frozen surface, and any sloping surfaces on which new fill is to be placed should first be benched in accordance with either Item 203.05 or ODOT GB2, depending on the slope of the existing ground surface at each location.

Also, as recommended in Section 6.2 of this report, any borrow materials to be used as new fill or backfill within 3 feet of the proposed subgrade level be tested in the laboratory to determine that the borrow materials are capable of exhibiting subgrade support characteristics that are no less than the CBR value used during the pavement design. If a global cement stabilization program is desired by the Owner, S&ME also recommends that borrow soil placed within 12 inches of the proposed subgrade level also possess a Plasticity Index no greater than 20.

Compaction requirements for the construction of earthen embankments are based on ODOT CMS Item 203.07.B (or Item 204.03 when within 12 inches of subgrade level), which specifies a minimum percent compaction based on the dry unit weight of the type of soil fill being placed as borrow. Heavy equipment should not perform compaction adjacent to the retaining wall. At the time of this submittal, it is unknown if a borrow source will be required for this project. S&ME recommends that, if a borrow site is required, that sampling and testing of this borrow material be performed prior to construction to verify that the borrow soils are suitable for the planned construction.

### *5.2.3 Compaction/Moisture Conditioning Concerns*

The cohesive soils encountered in the borings performed for this project, if exposed to inclement weather or rainfall, may rapidly absorb additional moisture and weaken. It is imperative that these soil types not be exposed to rainfall while in a loosened state (such as during disking and drying for moisture conditioning during fill placement). Should these materials become sufficiently saturated that additional moisture conditioning is impractical, the material should be wasted. Therefore, it is recommended that moisture conditioning only be performed when extended periods of suitable weather are anticipated, and that only the amount of borrow soil be exposed that may be moisture conditioned and properly compacted during suitable weather periods.

### *5.2.4 Subgrade Preparation*

Once the design subgrade elevation has been attained for the proposed roadway embankments, the subgrade should be compacted and proofrolled in accordance with ODOT Item 204 with any weak or unsuitable areas repaired in accordance with ODOT Item 204.07.

## 5.3 Culvert Replacement Recommendations

### *5.3.1 General Discussion*

S&ME understands that a large sinkhole was created by the partial collapse of a corrugated metal pipe (CMP) culvert below this section of Van Blaricum Road. We understand that the existing arch structure below Van Blaricum Road will be replaced with a new 4-sided box culvert with wing walls. We understand that the existing pavement for this section will be replaced and the sinkhole backfilled.

### *5.3.2 Site Preparation*

The bearing material is anticipated to vary from bedrock on the eastern portion of the box culvert to soil on the western portion of the box culvert. To minimize differential settlement and/or cracking of the bottom culvert slab, S&ME recommends undercutting exposed bedrock at the exposed bearing surface. The undercut should extend 2 feet below the planned bearing elevation and be backfilled in accordance with Section 5.2 of this report. The lateral limits of this remediation should extend to 18 inches beyond the culvert sides. A sketch illustrating this conceptually is provided as Figure 3 in Appendix I.

### *5.3.3 Culvert Bearing Resistance*

Based on the conditions encountered in the structure borings (B-5 and B-6), S&ME recommends that the culvert walls, and wing walls be supported on spread foundations which bear at least 12 inches below the bottom of any adjacent rip rap placed for scour protection, or at a depth in accordance with local frost code requirements, whichever is lower.

Table 5-1 summarizes the recommended nominal and factored bearing resistances ($q_n$ and $q_R$) at the service and strength limit states for spread foundations bearing on the soil for the culvert and wing walls.

**Table 5-1 – Recommended Bearing Capacities**

| Limit State | Anticipated Bearing Elevation (ft) | Recommended Nominal Bearing Resistance, $q_n$ (ksf)* | Resistance Factor, $\varphi$ | Recommended Factored Bearing Resistance, $q_R$ (ksf)* |
|---|---|---|---|---|
| Service | 605 to 607.5 | 4.0 | 1.0 | 4.0 |
| Strength | | 11.0 | 0.5 | 5.5 |

*** For vertical loading only. Foundations may need to extend deeper to generate passive pressure to resist lateral loads or to extend below the scour depth.**

**** Article 10.5.5.1 of AASHTO LRFD Bridge Design Specifications.**

***** Table 10.5.5.2.2-1 of AASHTO LRFD Bridge Design Specifications.**

****** Overexcavation below the plan bearing elevation may be required to reach acceptable bearing materials.**

If weaker soils or existing unsuitable fill are present at or just below the proposed bottom of foundation elevation, the excavation should be overexcavated and backfilled with flowable fill or as described in Section 5.2 of this report.

Water from the stream will need to be diverted away from the foundation excavation area during excavation and construction of the foundations. The foundation bearing surfaces should be kept dry and free from standing water during all construction activities. If the foundation materials become wet, additional excavation may be necessary prior to placing foundation concrete. Sumps may be required to pump water accumulations (seepage) from the foundation excavations since the foundations will extend below the level of water in the stream.

The sidewalls of the foundation excavations should be either sloped back or braced in accordance with the most recent OSHA excavation guidelines. Any water should be diverted away from the foundation excavation area during excavation and construction of the foundations. The foundation bearing surfaces should be kept dry and free from standing water during all construction activities.

S&ME recommends that the foundation excavations be observed by the Geotechnical Engineer of Record or the Engineer's designated representative to verify the unsuitable bearing soils are overexcavated and replaced in accordance to Section 6.2.2, and that suitable bearing conditions are present prior to the placement of concrete.

### *5.3.4 Eccentricity (Overturning)*

Proposed spread foundations for the structure which are subjected to eccentric loadings should be designed to account for such loading. For reference, Articles 10.6.1.3, 10.6.3.3 and 11.6.3 of the latest AASHTO LRFD Bridge Design Specifications (BDS) provide guidance on designing for eccentric loading. Once the footing design has been finalized, it is recommended that the structural design should confirm that the eccentricity of the foundation is less than 0.33 of the appropriate footing dimension (width and/or length) for footings on soils, respectively (AASHTO Article 10.6.3.3).

### *5.3.5 Sliding Resistance*

Sliding resistance to lateral loads is provided by the weight of the structure in combination with the friction developed along the bottom of the foundations at the interface with the underlying soils, as well as from passive resistance from the soil available throughout the design life of the structure. The factored resistance against failure by sliding (RR) should be determined using Eq. 10.6.3.4-1 of the current AASHTO LRFD BDS.

Because the proposed foundations will likely consist of pre-cast units which bear on cohesive soil, S&ME recommends that the nominal sliding resistance ($R_\tau$) be determined by using the lesser of:

- Nominal sliding resistance ($R_\tau$) calculated using a unit shear resistance value of 2,000 psf (equal to soil's undrained shear strength); or,
- 50% of the vertical effective stress (ksf) on the bottom of the foundation (as shown in Figure 10.6.3.4-1 of the AASHTO LRFD, in the event that over-excavation is required to remove unsuitable soils and at least 6 inches of compacted granular material is placed beneath the headwall.

As shown in AASHTO Figure 10.6.3.4-1, variations in the distribution of the applied vertical effective stress across the width and/or length of the footing must also be considered, as the method which computes the lesser value of $R_\tau$ may change based on the distribution of stress to the base of the footing. The factored resistance to sliding may then be computed using the AASHTO resistance factor for shear resistance ($\varphi_\tau$) of 0.85 for foundations on cohesive soil.

If an overexcavation is necessary to remove weak, unsuitable soils and backfilled as described in Section 6.2.2, S&ME recommends using a value of 0.60 for the coefficient of friction between the ODOT CMS Item 703.16 Type E aggregate (minimum 12 inches thick) and the foundation. In addition to the above parameters, S&ME recommends using a unit weight of 125 pounds per cubic foot (pcf) for soil above the foundation bearing level during evaluation of overturning potential.

Additional resistance to sliding of spread footings could be derived from increasing the width of the footing or from passive pressure developed along the inside toe of the footing. If additional passive resistance is needed, a foundation key can be designed. The foundation key should be located within the middle-half of the foundation. S&ME recommends a nominal passive resistance of 200 psf per foot of embedment. Passive resistance should be neglected above the anticipated depth of scour and/or frost. S&ME recommends a resistance factor for passive resistance ($\varphi_{ep}$) of 0.50 be used to compute the factored passive resistance. It is important that all loosened soil be removed from the face of the foundation excavation that will provide the passive resistance.

### *5.3.6 Bedrock Excavation Considerations*

Interbedded shale and limestone bedrock was encountered in the borings performed for the culvert, and rock excavation will likely be required to construct the spread foundations. The contractor should be made aware of the need for bedrock excavation at this site. The layers of limestone interbedded within the shale bedrock is hard and can be difficult to excavate with conventional mechanical equipment in confined spaces (e.g., spread foundation, utility trenches, etc.).

S&ME recommends that the bidding documents for this project encourage all potential contractors to perform additional exploratory test pits to investigate the depth to which excavations can reasonably be performed using conventional soil excavation equipment and methods. It must be emphasized that a direct correlation should not be made between the performance of the drilling rigs and the ability of construction equipment to excavate the bedrock at this site.

### *5.3.7 Scour Countermeasures*

Plan information from BBI indicates no protection from scour with rock channel protection. It is recommended that scour analysis be performed and mitigation methods such as rip rap, grouting or scour micropiles be used based on the scour analysis. Rip-rap used for this purpose should be properly sized based on the anticipated channel velocities. However, rip-rap is not a permanent countermeasure against, nor does it totally eliminate the potential for scour. For this reason, it is strongly recommended that the project plans and specifications also contain provisions for routine maintenance of the rip-rap blanket to ensure that the design blanket thickness is preserved over the design life of the culvert. Additionally, in all cases where rip-rap is used for scour protection, the culvert must be monitored during and inspected after, periods of high flow. Considering the toe of the abutments will be below the design flood elevation, S&ME recommends the embedded portion of the wall be protected from scour to minimize potential for loss of backfill soil or retained soil from behind the walls.

### *5.3.8 Lateral Earth Pressures*

The proposed culvert walls and wing walls must be designed to withstand lateral earth pressures, as well as hydrostatic pressures, that may develop behind the structures. The magnitude of the lateral earth pressures varies on the basis of soil type, permissible wall movement, and the configuration of the backfill.

To minimize lateral earth pressures, the zone behind below grade walls should be backfilled with granular soil, and the backfill should be effectively drained. For effective drainage, a zone of free-draining gravel (ODOT Item 518.03) should be used directly behind the structures for a minimum thickness of 24 inches in accordance with ODOT Item 518.05. This granular zone should drain to either weepholes or a pipe, so that hydrostatic pressures do not develop against the walls.

The type of backfill beyond the free-draining granular zone, however, will govern the magnitude of the pressure to be used for structural design. Pressures of a relatively low magnitude will be developed by the use of granular backfill, whereas a cohesive (clay) backfill will result in the development of much higher pressures. To reduce the lateral earth pressures and increase slope stability, S&ME recommends using granular backfill behind the below grade walls.

It is recommended that granular backfill be used behind the modular block walls, box culverts, and wing walls. The backfill should be placed in a wedge formed by the back of the structure and a line rising from the base of the structure at an angle no greater than 60 degrees from the horizontal. Granular backfill behind the structure should be compacted in accordance with ODOT Item 203 of the most recent CMS. Overcompaction in areas directly behind the walls should be avoided as this might cause damage to the structure.

If proper drainage (ODOT CMS Item 518.05) is used and the granular backfill is placed and compacted in the wedge described previously, an equivalent fluid unit weight of 35 pounds per cubic foot (pcf) may be used if a

wall movement equivalent to 0.25 percent of the height of the abutment, wingwall, or retaining wall (H) is allowed to occur. Such movement is considered sufficient to mobilize an active earth pressure condition. In this case, the resultant lateral force should be taken as acting at 0.33H (AASHTO LRFD Article 3.11.5). If this movement is not anticipated or cannot occur, it is recommended that an "at-rest" equivalent fluid unit weight of 55 pcf be used.

Compacted cohesive materials tend alternatively to shrink, expand and creep over periods of time and create significant lateral pressures on any adjacent structures. Cohesive materials also require a greater amount of movement to mobilize an active earth pressure condition. For these reasons, if proper drainage (ODOT Item 518) is provided and a wall movement in excess of 1.0 percent of the height of the abutment or retaining wall (H) is allowed to occur, an equivalent fluid unit weight of 65 pcf may be used for design of the abutment walls to resist the lateral loads imparted by drained cohesive backfill. If this amount of movement is not anticipated or cannot occur, it is recommended that an "at-rest" equivalent fluid unit weight of 80 pcf be used.

The structures must also be designed to withstand the surcharge effect of traffic in addition to the vertical load resulting from the weight of any fill and pavement to be placed over the structures. To estimate vertical loading, a total unit weight of 120 pcf and 125 pcf may be used for compacted cohesive and granular soil, respectively.

### 5.4 Retaining Wall Design

After completion of our explorations, the HCEO requested S&ME evaluate a soldier pile and lagging retaining wall along the western edge of the planned roadway. HCEO requested the lagging consist of unreinforced drilled shafts offset from the reinforced sections. Kleingers provided S&ME with 15 percent design plans showing the approximate location of the planned retaining wall. The culvert will outlet through the soldier pile retaining wall, however, the details of the retaining wall and culvert connections are beyond the scope of our services.

Based on the condition encountered S&ME developed design plans, which are included as Appendix V to this report. Following receipt of comments from HCEO, S&ME will finalize this report and the retaining wall design plans. Table 5-2 summarizes the soldier pile retaining wall. Refer to Appendix V for more details.

**Table 5-2 – Soldier Pile Retaining Wall Summary**

| Shaft Diameter (in) | Shaft Spacing (in) | Beam Size | Number of Shafts |
|---|---|---|---|
| 36 | 60 | W24x55 | 26 |
| 36 | 60 | W24x68 | 23 |
| 36 | 60 | W24x76 | 17 |
| 36 | 36 | W24x117 | 4 |
| 36 | 60 | Unreinforced | 64 |

## 6.0 Follow-up Services

Our services should not end with the submission of this geotechnical report. S&ME should be kept involved throughout the design and construction process to maintain continuity and to verify our recommendations are

properly interpreted and implemented. To achieve this, we should be retained to review project plans and specifications with the designers to see that our recommendations are fully incorporated. We also should be retained to observe and test the site preparation, foundation excavation, and building construction. If we are not allowed the opportunity to continue our involvement on this project, we cannot be held responsible for the recommendations in this report.

Our familiarity with the site and with the foundation recommendations will make us a valuable part of your construction quality assurance team. In addition, a qualified engineering technician should observe and test all structural concrete and steel. Only experienced, qualified persons trained in geotechnical engineering and familiar with foundation construction should be allowed to evaluate and test foundation excavations. Normally, full-time observations and testing of the site work and foundation installation is appropriate.

## 7.0 Final Considerations

This report has been prepared in accordance with generally accepted geotechnical engineering practice for specific application to this project. The conclusions and recommendations contained in this report are based upon applicable standards of our practice in this geographic area at the time this report was prepared. No other representation or warranty either express or implied, is made.

We relied on project information given to us to develop our conclusions and recommendations. If project information described in this report is not accurate, or if it changes during project development, we should be notified of the changes so that we can modify our recommendations based on this additional information if necessary.

Our conclusions and recommendations are based on limited data from a field exploration program. Subsurface conditions can vary widely between explored areas. Some variations may not become evident until construction. If conditions are encountered which appear different than those described in our report, we should be notified. This report should not be construed to represent subsurface conditions for the entire site.

Unless specifically noted otherwise, our field exploration program did not include an assessment of regulatory compliance, environmental conditions or pollutants or presence of any biological materials (mold, fungi, bacteria). If there is a concern about these items, other studies should be performed. S&ME can provide a proposal and perform these services if requested.

S&ME should be retained to review the final plans and specifications to confirm that earthwork, foundation, and other recommendations are properly interpreted and implemented. The recommendations in this report are contingent on S&ME's review of final plans and specifications followed by our observation and monitoring of earthwork and foundation construction activities..

# Important Information about This

# Geotechnical-Engineering Report

**Subsurface problems are a principal cause of construction delays, cost overruns, claims, and disputes.**

**While you cannot eliminate all such risks, you can manage them. The following information is provided to help.**

## Geotechnical Services Are Performed for Specific Purposes, Persons, and Projects

Geotechnical engineers structure their services to meet the specific needs of their clients. A geotechnical-engineering study conducted for a civil engineer may not fulfill the needs of a constructor — a construction contractor — or even another civil engineer. Because each geotechnical- engineering study is unique, each geotechnical-engineering report is unique, prepared *solely* for the client. No one except you should rely on this geotechnical-engineering report without first conferring with the geotechnical engineer who prepared it. *And no one — not even you* — should apply this report for any purpose or project except the one originally contemplated.

## Read the Full Report

Serious problems have occurred because those relying on a geotechnical-engineering report did not read it all. Do not rely on an executive summary. Do not read selected elements only.

## Geotechnical Engineers Base Each Report on a Unique Set of Project-Specific Factors

Geotechnical engineers consider many unique, project-specific factors when establishing the scope of a study. Typical factors include: the client's goals, objectives, and risk-management preferences; the general nature of the structure involved, its size, and configuration; the location of the structure on the site; and other planned or existing site improvements, such as access roads, parking lots, and underground utilities. Unless the geotechnical engineer who conducted the study specifically indicates otherwise, do not rely on a geotechnical-engineering report that was:

- not prepared for you;
- not prepared for your project;
- not prepared for the specific site explored; or
- completed before important project changes were made.

Typical changes that can erode the reliability of an existing geotechnical-engineering report include those that affect:

- the function of the proposed structure, as when it's changed from a parking garage to an office building, or from a light-industrial plant to a refrigerated warehouse;
- the elevation, configuration, location, orientation, or weight of the proposed structure;
- the composition of the design team; or
- project ownership.

As a general rule, *always* inform your geotechnical engineer of project changes—even minor ones—and request an assessment of their impact. *Geotechnical engineers cannot accept responsibility or liability for problems that occur because their reports do not consider developments of which they were not informed.*

## Subsurface Conditions Can Change

A geotechnical-engineering report is based on conditions that existed at the time the geotechnical engineer performed the study. *Do not rely on a geotechnical-engineering report whose adequacy may have been affected by*: the passage of time; man-made events, such as construction on or adjacent to the site; or natural events, such as floods, droughts, earthquakes, or groundwater fluctuations. *Contact the geotechnical engineer before applying this report to determine if it is still reliable.* A minor amount of additional testing or analysis could prevent major problems.

## Most Geotechnical Findings Are Professional Opinions

Site exploration identifies subsurface conditions only at those points where subsurface tests are conducted or samples are taken. Geotechnical engineers review field and laboratory data and then apply their professional judgment to render an opinion about subsurface conditions throughout the site. Actual subsurface conditions may differ — sometimes significantly — from those indicated in your report. Retaining the geotechnical engineer who developed your report to provide geotechnical-construction observation is the most effective method of managing the risks associated with unanticipated conditions.

## A Report's Recommendations Are Not Final

Do not overrely on the confirmation-dependent recommendations included in your report. *Confirmation-dependent recommendations are not final,* because geotechnical engineers develop them principally from judgment and opinion. Geotechnical engineers can finalize their recommendations *only* by observing actual subsurface conditions revealed during construction. *The geotechnical engineer who developed your report cannot assume responsibility or liability for the report's confirmation-dependent recommendations if that engineer does not perform the geotechnical-construction observation required to confirm the recommendations' applicability.*

## A Geotechnical-Engineering Report Is Subject to Misinterpretation

Other design-team members' misinterpretation of geotechnical-engineering reports has resulted in costly

problems. Confront that risk by having your geotechnical engineer confer with appropriate members of the design team after submitting the report. Also retain your geotechnical engineer to review pertinent elements of the design team's plans and specifications. Constructors can also misinterpret a geotechnical-engineering report. Confront that risk by having your geotechnical engineer participate in prebid and preconstruction conferences, and by providing geotechnical construction observation.

## Do Not Redraw the Engineer's Logs

Geotechnical engineers prepare final boring and testing logs based upon their interpretation of field logs and laboratory data. To prevent errors or omissions, the logs included in a geotechnical-engineering report should *never* be redrawn for inclusion in architectural or other design drawings. Only photographic or electronic reproduction is acceptable, *but recognize that separating logs from the report can elevate risk.*

## Give Constructors a Complete Report and Guidance

Some owners and design professionals mistakenly believe they can make constructors liable for unanticipated subsurface conditions by limiting what they provide for bid preparation. To help prevent costly problems, give constructors the complete geotechnical-engineering report, *but* preface it with a clearly written letter of transmittal. In that letter, advise constructors that the report was not prepared for purposes of bid development and that the report's accuracy is limited; encourage them to confer with the geotechnical engineer who prepared the report (a modest fee may be required) and/or to conduct additional study to obtain the specific types of information they need or prefer. A prebid conference can also be valuable. *Be sure constructors have sufficient time* to perform additional study. Only then might you be in a position to give constructors the best information available to you, while requiring them to at least share some of the financial responsibilities stemming from unanticipated conditions.

## Read Responsibility Provisions Closely

Some clients, design professionals, and constructors fail to recognize that geotechnical engineering is far less exact than other engineering disciplines. This lack of understanding has created unrealistic expectations that have led to disappointments, claims, and disputes. To help reduce the risk of such outcomes, geotechnical engineers commonly include a variety of explanatory provisions in their reports. Sometimes labeled "limitations," many of these provisions indicate where geotechnical engineers' responsibilities begin and end, to help others recognize their own responsibilities and risks. *Read these provisions closely.* Ask questions. Your geotechnical engineer should respond fully and frankly.

## Environmental Concerns Are Not Covered

The equipment, techniques, and personnel used to perform an *environmental* study differ significantly from those used to perform a *geotechnical* study. For that reason, a geotechnical-engineering report does not usually relate any environmental findings, conclusions, or recommendations; e.g., about the likelihood of encountering underground storage tanks or regulated contaminants. *Unanticipated environmental problems have led to numerous project failures.* If you have not yet obtained your own environmental information, ask your geotechnical consultant for risk-management guidance. *Do not rely on an environmental report prepared for someone else.*

## Obtain Professional Assistance To Deal with Mold

Diverse strategies can be applied during building design, construction, operation, and maintenance to prevent significant amounts of mold from growing on indoor surfaces. To be effective, all such strategies should be devised for the *express purpose* of mold prevention, integrated into a comprehensive plan, and executed with diligent oversight by a professional mold-prevention consultant. Because just a small amount of water or moisture can lead to the development of severe mold infestations, many mold- prevention strategies focus on keeping building surfaces dry. While groundwater, water infiltration, and similar issues may have been addressed as part of the geotechnical- engineering study whose findings are conveyed in this report, the geotechnical engineer in charge of this project is not a mold prevention consultant; *none of the services performed in connection with the geotechnical engineer's study were designed or conducted for the purpose of mold prevention. Proper implementation of the recommendations conveyed in this report will not of itself be sufficient to prevent mold from growing in or on the structure involved.*

## Rely, on Your GBC-Member Geotechnical Engineer for Additional Assistance

Membership in the Geotechnical Business Council of the Geoprofessional Business Association exposes geotechnical engineers to a wide array of risk-confrontation techniques that can be of genuine benefit for everyone involved with a construction project. Confer with you GBC-Member geotechnical engineer for more information.

GEOTECHNICAL BUSINESS COUNCIL
of the Geoprofessional Business Association

8811 Colesville Road/Suite G106, Silver Spring, MD 20910
Telephone: 301/565-2733 Facsimile: 301/589-2017
e-mail: info@geoprofessional.org www.geoprofessional.org

Copyright 2015 by Geoprofessional Business Association (GBA). Duplication, reproduction, or copying of this document, or its contents, in whole or in part, by any means whatsoever, is strictly prohibited, except with GBA's specific written permission. Excerpting, quoting, or otherwise extracting wording from this document is permitted only with the express written permission of GBA, and only for purposes of scholarly research or book review. Only members of GBA may use this document as a complement to or as an element of a geotechnical-engineering report. Any other firm, individual, or other entity that so uses this document without being a GBA member could be commiting negligent or intentional (fraudulent) misrepresentation.

# Appendices

# Appendix I – Additional Figures

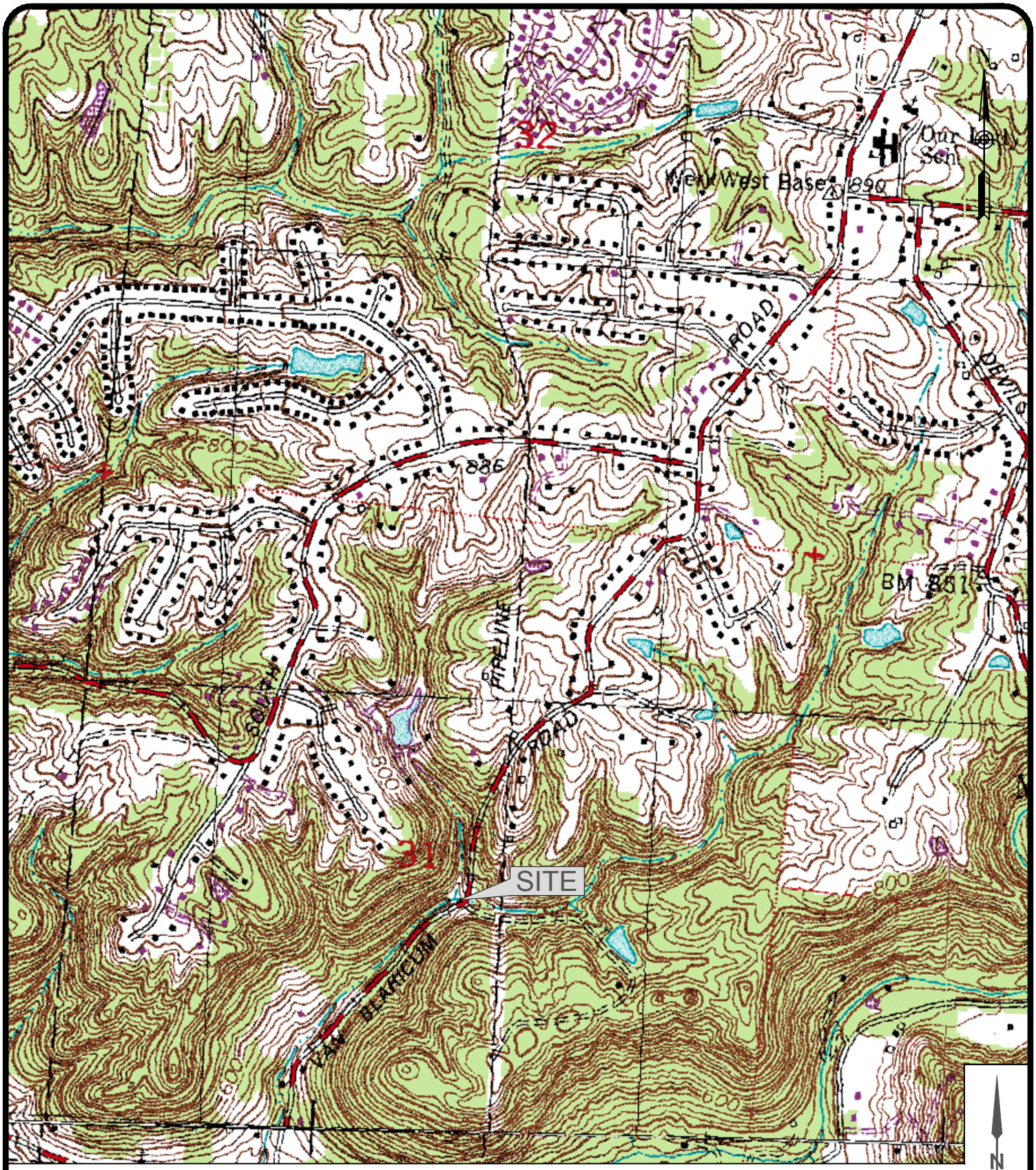


SCALE

0 250 500 1000 2000

Drawing Path: L:\Projects\2017\GEO\1178-17-011 Ham Co Eng_Van Blaricum\Graphics\Composite File.dwg

# Vicinity Map

.

Van Blaricum Road Improvements
Hamilton County, Ohio

| SCALE: | FIGURE NO. |
|---|---|
| 1" = 1000' | 1 |
| DATE: | |
| 8/30/2017 | |
| PROJECT NUMBER | |
| 1178-17-011 | |

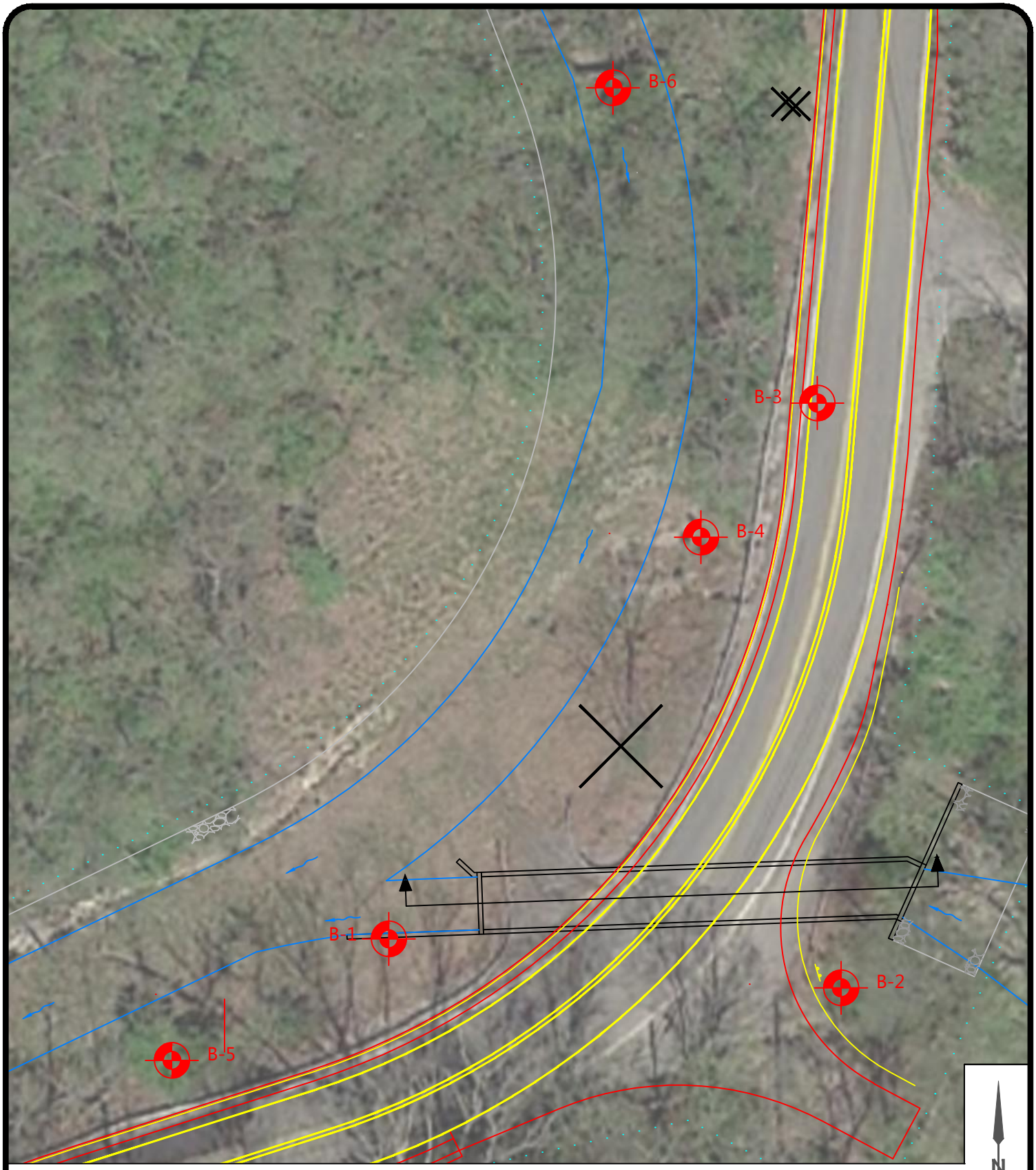


LEGEND

Boring Location B-X

SCALE

0 7.5 15 30 60

N

Drawing Path: L:\Projects\2017\GEO\1178-17-011 Ham Co Eng_Van Blaricum\Graphics\Composite File.dwg

| | | | |
|---|---|---|---|
| | **Boring and Section Plan** | SCALE: 1" = 30' | FIGURE NO. |
| | Van Blaricum Road Improvements<br>Hamilton County, Ohio | DATE: 8/30/2017<br>PROJECT NUMBER 1178-17-011 | 2 |

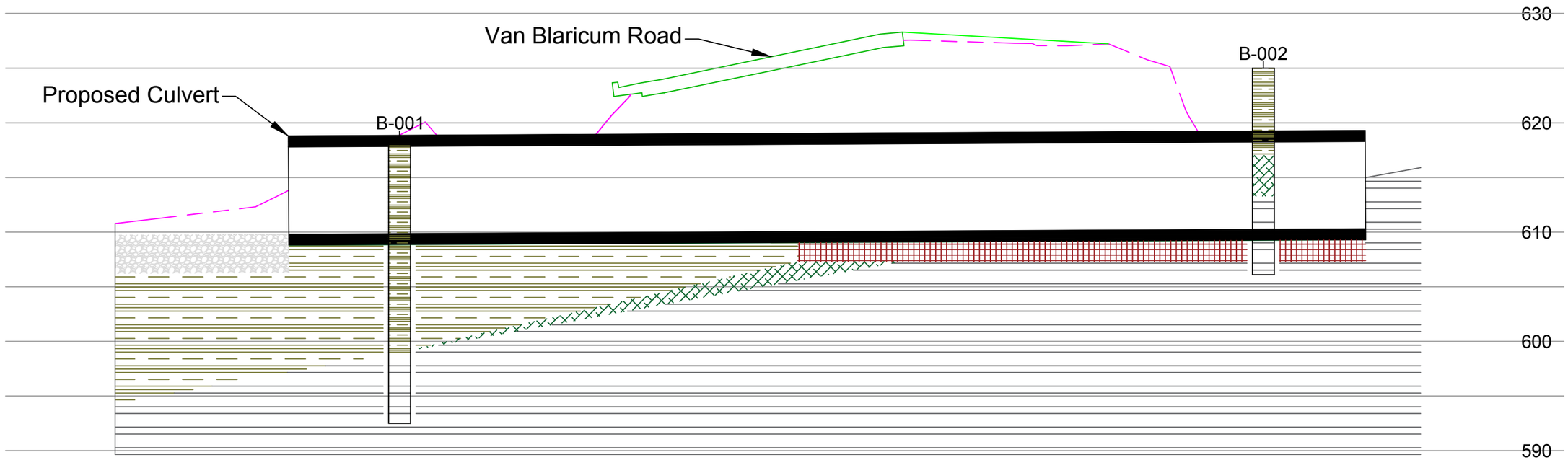


## SCALE

0 5 10 20 40

## LEGEND

B-00X Boring Location

Silty Clay A-6(b)

Rip Rap

Over Excavation

Alluvium

Bedrock

**Culvert Midline Section**

Van Blaricum Road Improvements
Hamilton County, Ohio

| | |
|---|---|
| SCALE: | 1" = 10' |
| DATE: | 8/30/2017 |
| PROJECT NUMBER | 1178-17-011 |
| FIGURE NO. | 3 |

Drawing path: L:\Projects\2017\GEO\1178-17-011 Ham Co Eng_Van Blaricum\Graphics\Composite File.dwg

# Appendix II – Boring Logs

## EXPLANATION OF SYMBOLS AND TERMS USED ON BORING LOGS FOR SAMPLING AND DESCRIPTION OF SOIL

SAMPLING DATA

- Blocked-in "SAMPLES" column indicates sample was attempted and recovered within this depth interval.

- Sample was attempted within this interval but not recovered.

2/5/9 - The number of blows required for each 6-inch increment of penetration of a "Standard" 2-inch O.D. split-barrel sampler, driven a distance of 18 inches by a 140-pound hammer freely falling 30 inches. Addition of one of the following symbols indicates the use of a split-barrel other than the 2" O.D. sampler:

- 2S - 2½"O.D. split-barrel sampler
- 3S - 3" O.D. split-barrel sampler

P - Shelby tube sampler, 3" O.D., hydraulically pushed.

R - Refusal of sampler in very-hard or dense soil, or on a resistant surface.

50-2" - Number of blows (50) to drive a split-barrel sampler a certain number of inches (2), other than the normal 6-inch increment.

S/D - Split-barrel sampler (S) advanced by weight of drill rods (D),

S/H - Split-barrel sampler (S) advanced by combined weight of rods and drive hammer (H).

SOIL DESCRIPTIONS

All soils have been classified basically in accordance with the Unified Soil Classification System, but this system has been augmented by the use of special adjectives to designate the approximate percentages of minor components as follows:

| Adjective | Percent by Weight |
|---|---|
| trace | 1 to 10 |
| little | 11 to 20 |
| some | 21 to 35 |
| "and" | 36 to 50 |

The following terms are used to describe density and consistency of soils:

| Term (Granular Soils) | Blows per foot ($N_{60}$) |
|---|---|
| Very-loose | Less than 5 |
| Loose | 5 to 10 |
| Medium-dense | 11 to 30 |
| Dense | 31 to 50 |
| Very-dense | Over 50 |

| Term (Cohesive Soils) | Qu (tsf) |
|---|---|
| Very-soft | Less than 0.25 |
| Soft | 0.25 to 0.5 |
| Medium-stiff | 0.5 to 1.0 |
| Stiff | 1.0 to 2.0 |
| Very-stiff | 2.0 to 4.0 |
| Hard | Over 4.0 |

## EXPLANATION OF SYMBOLS AND TERMS USED ON BORING LOGS FOR SAMPLING AND DESCRIPTION OF ROCK

### SAMPLING DATA

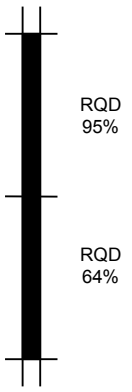


When bedrock is encountered and rock core samples are attempted, the length of core recovered and lost during the core run is reported as a percentage in the "SAMPLE REC-%" column and the Rock Quality Designation (RQD) value is reported as a percentage in the "SAMPLE EFFORT" column. The type of rock core barrel utilized is recorded under the heading "SAMPLER(S)". Rock-core barrels can be of either single- or double-tube construction, and a special series of double-tube barrels, designated by the suffix M, is commonly used to obtain maximum core recovery in very-soft or fractured rock. Four basic groups of barrels are used most often in subsurface investigations for engineering purposes, and these groups and the diameters of the cores obtained are as follows:

| | | |
|---|---|---|
| AX, AW, AXM, AWM | - | 1-1/8 inches |
| BX, BW, BXM, BWM | - | 1-5/8 inches |
| NX, NW, NXM, NWM | - | 2-1/8 inches |
| NQ | - | 1-7/8 inches |

Rock Quality Designation (RQD) is expressed as a percentage and is obtained by summing the total length of all core pieces which are at least 4 inches long and then dividing this sum by the total length of core run. It has been found that there is a reasonably good relationship between the RQD value and the general quality of rock for engineering purposes: This relationship is shown as follows:

| RQD - % | General Quality |
|---|---|
| 0 - 25 | Very-poor |
| 25 – 50 | Poor |
| 50 – 75 | Fair |
| 75 – 90 | Good |
| 90 – 100 | Excellent |

### ROCK HARDNESS

THE FOLLOWING TERMS ARE USED TO DESCRIBE ROCK HARDNESS:

| Term | Meaning | Mohs' Hardness |
|---|---|---|
| Very-soft | Rock such as shale can be easily picked apart by the fingers. Sandstone is poorly cemented and very friable. The rock resembles hard clay or dense sand, but has rock structure. | Less than 1 |
| Soft | Rock such as shale, siltstone or limestone can be scratched or powdered by fingernail pressure. Sandstone is mostly poorly cemented, and individual sand grains can be separated from the main rock mass by a fingernail. | 1 to 1½ |
| Medium-hard | Rock cannot be scratched by a fingernail, but can be powdered by a knife. Sandstone is mostly well cemented, but individual grains can be removed by scratching with a knife. | 2½ to 5½ |
| Hard | Rock is well cemented and cannot be powdered by a knife. Rock can be powdered by a steel file. | 5½ to 6½ |
| Very-hard | Rock cannot be scratched by a steel file and the core sample rings when struck with a hammer. | Greater than 6½ |

S&ME JOB: 1178-17-011

| | | | | |
|---|---|---|---|---|
| PROJECT: VAN BLARICUM ROAD | DRILLING FIRM / OPERATOR: CSD / M. JAMESON | DRILL RIG: CSD CME 55 | STATION / OFFSET: 12+66.0, 34.0 LT | EXPLORATION ID **B-001** |
| TYPE: SETTLEMENT | SAMPLING FIRM / LOGGER: S&ME / A. DINGLER | HAMMER: CME AUTOMATIC | ALIGNMENT: ROADWAY | |
| PID: BR ID: | DRILLING METHOD: 3.25" HSA / NQ2 | CALIBRATION DATE: 7/3/17 | ELEVATION: 618.0 (MSL) EOB: 25.5 ft. | PAGE 1 OF 1 |
| START: 8/1/17 END: 8/1/17 | SAMPLING METHOD: SPT / NQ2 | ENERGY RATIO (%): 90.3 | LAT / LONG: Not Recorded | |

| MATERIAL DESCRIPTION AND NOTES | ELEV. 618.0 | DEPTHS | SPT/ RQD | $N_{60}$ | REC (%) | SAMPLE ID | HP (tsf) | GRADATION (%) GR | CS | FS | SI | CL | ATTERBERG LL | PL | PI | WC | ODOT CLASS (GI) | BACK FILL |
|---|---|---|---|---|---|---|---|---|---|---|---|---|---|---|---|---|---|---|
| FILL:Stiff, gray brown, **SANDY SILT**, some fine to coarse sand, some cobbles, little fine to coarse gravel, damp, contains cinders. | 615.0 | 1–2 | 5 4 5 | 14 | 33 | SS-1 | 2.0-3.0 | - | - | - | - | - | - | - | - | - | A-4a (V) | |
| FILL: Soft, gray brown. **SILTY CLAY**, little fine to coarse gravel, damp. | 612.5 | 3–5 | 2 1 3 | 6 | 33 | SS-2 | 0.75-1.5 | - | - | - | - | - | - | - | - | 16 | A-6b (V) | |
| FILL: Soft, dark brown, **SILTY CLAY**, little fine to coarse gravel, little fine to coarse sand, contains organics, contains organics, damp. | 610.0 | 6–7 | 1 1 4 | 8 | 50 | SS-3 | 0.0-0.75 | - | - | - | - | - | - | - | - | 19 | A-6b (V) | |
| FILL: Stiff, brown mottled gray, **SILT AND CLAY**, little fine to coarse gravel, trace fine to coarse sand, contains organics, damp. | 608.5 | 9 | 5 4 | - | 100 | SS-4A | 2.5-3.0 | - | - | - | - | - | - | - | - | - | A-6a (V) | |
| FILL: Medium stiff, brown **CLAY**, little fine to coarse sand, little fine to coarse gravel, damp. | 606.3 | 10 | 3 | | 100 | SS-4B | 2.0-2.5 | - | - | - | - | - | 44 | 19 | 25 | 22 | A-7-6 (V) | |
| Fill: Stiff, gray, **SILTY CLAY**, little fine to coarse gravel, contains cinders, damp. | 601.3 | 14–15 | 6 7 6 | 20 | 33 | SS-5 | | - | - | - | - | - | - | - | - | - | A-6b (V) | |
| Very-stiff, gray, **SILTY CLAY**, some fine to coarse gravel, little fine to coarse sand, damp. | 599.0 | 19 | 9 50/5" | - | 55 | SS-6 | | - | - | - | - | - | - | - | - | 14 | A-6b (V) | |
| **INTERBEDDED SHALE(85%) AND LIMESTONE(15%)**: Shale, gray, highly weathered, very weak, highly fractured to fractured; Limestone, gray, slightly to moderately weathered, strong, 4"layer at 20.6', 2" layers at 22.9' and 23.5'. (REC=100%) | | TR 21–22 | 60 | | 100 | NX-7 | | - | - | - | - | - | - | - | - | 12 | CORE | |
| | 592.5 | EOB 23–25 | 11 | | 69 | NX-8 | | | | | | | | | | | CORE | |

NOTES: NONE

ABANDONMENT METHODS, MATERIALS, QUANTITIES: BACKFILLED WITH AUGER CUTTINGS

SME ODOT LOG(8.5X11)-CURRENT WITH PLATES - OH DOT.GDT - 8/30/17 13:25 - L:\RESOURCES\CS\LABORATORY\GINTW\PROJECTS\117817011.GPJ

S&ME JOB: 1178-17-011

| | | | |
|---|---|---|---|
| PROJECT: VAN BLARICUM ROAD | DRILLING FIRM / OPERATOR: CSD / M. JAMESON | DRILL RIG: CSD CME 55 | STATION / OFFSET: 13+35.0, 45.0 RT |
| TYPE: SETTLEMENT | SAMPLING FIRM / LOGGER: S&ME / A. DINGLER | HAMMER: CME AUTOMATIC | ALIGNMENT: ROADWAY |
| PID: BR ID: | DRILLING METHOD: 3.25" HSA / NQ2 | CALIBRATION DATE: 7/3/17 | ELEVATION: 625.0 (MSL) EOB: 18.9 ft. |
| START: 7/31/17 END: 7/31/17 | SAMPLING METHOD: SPT / NQ2 | ENERGY RATIO (%): 90.3 | LAT / LONG: Not Recorded |

EXPLORATION ID **B-002**

PAGE 1 OF 1

| MATERIAL DESCRIPTION AND NOTES | ELEV. | DEPTHS | SPT/ RQD | $N_{60}$ | REC (%) | SAMPLE ID | HP (tsf) | GRADATION (%) GR | CS | FS | SI | CL | ATTERBERG LL | PL | PI | WC | ODOT CLASS (GI) | BACK FILL |
|---|---|---|---|---|---|---|---|---|---|---|---|---|---|---|---|---|---|---|
| FILL: Medium stiff, brown gray, **SILTY CLAY** and fine to coarse gravel, little fine to coarse sand. | 625.0 | | 5 4 5 | 14 | 72 | SS-1 | 4.5+ | - | - | - | - | - | - | - | - | - | A-6b (V) | |
| FILL: Medium stiff, dark-brown, **SILTY CLAY** and fine to coarse gravel, trace fine to coarse sand, contains cinders. | 622.0 | | 2 3 3 | 9 | 33 | SS-2 | 0.75-1.0 | - | - | - | - | - | - | - | - | - | A-6b (V) | |
| FILL: Stiff to very stiff, brown mottled gray, **CLAY**, trace fine gravel, trace fine sand, moist. | 619.8 | | | | | ST-3 | 2.0-2.5 | 1 | 1 | 3 | 51 | 44 | 53 | 28 | 25 | 32 | A-7-6 (17) | |
| POSSIBLE FILL: Medium dense, gray, **GRAVEL AND/OR STONE FRAGMENTS WITH SAND AND SILT** | 617.0 | | 16 11 12 | 35 | 50 | SS-4 | | - | - | - | - | - | - | - | - | - | A-2-6 (V) | |
| Weak, gray, **HIGHLY WEATHERED SHALE** | 613.3 | TR | 50/5" | - | 100 | SS-5 | | - | - | - | - | - | - | - | - | - | Rock (V) | |
| **INTERBEDDED SHALE(80%) AND LIMESTONE(20%)** 13.9' Shale, gray, highly weathered, very weak, fractured; 14.4' Limestone, gray, slightly weathered, strong, thin bedded, fossiliferous; | 611.1 | | 52 | | 92 | NX-6 | | | | | | | | | | | CORE | |
| 15.0' Shale, gray, highly weathered, very weak; 15.1' Limestone ,gray, moderately to slightly weathered, strong, thin bedded, fossiliferous, 90° high angle joint; | | | 74 | | 91 | NX-7 | | | | | | | | | | | CORE | |
| 15.3' Shale, gray, moderately weathered, weak to slightly strong, contains 2" piece of Limestone at 16'. | 606.1 | EOB | | | | | | - | - | - | - | - | - | - | - | 6 | | |

NOTES: SEEPAGE ENCOUNTERED AT 16.0 FEET.

ABANDONMENT METHODS, MATERIALS, QUANTITIES: BACKFILLED WITH AUGER CUTTINGS

SME ODOT LOG(8.5X11)-CURRENT WITH PLATES - OH DOT.GDT - 8/30/17 13:25 - L:\RESOURCES\CS\LABORATORY\GINTW\PROJECTS\117817011.GPJ

S&ME JOB: 1178-17-011

| | | | |
|---|---|---|---|
| PROJECT: VAN BLARICUM ROAD | DRILLING FIRM / OPERATOR: CSD / M. JAMESON | DRILL RIG: CSD CME 55 | STATION / OFFSET: 14+45.0, 8.0 LT |
| TYPE: SETTLEMENT | SAMPLING FIRM / LOGGER: S&ME / A. DINGLER | HAMMER: CME AUTOMATIC | ALIGNMENT: ROADWAY |
| PID: BR ID: | DRILLING METHOD: 3.25" HSA / NQ2 | CALIBRATION DATE: 7/3/17 | ELEVATION: 637.0 (MSL) EOB: 25.5 ft. |
| START: 7/31/17 END: 7/31/17 | SAMPLING METHOD: SPT / NQ2 | ENERGY RATIO (%): 90.3 | LAT / LONG: Not Recorded |

EXPLORATION ID **B-003**

PAGE 1 OF 1

| MATERIAL DESCRIPTION AND NOTES | ELEV. 637.0 | DEPTHS | SPT/ RQD | $N_{60}$ | REC (%) | SAMPLE ID | HP (tsf) | GRADATION (%) GR | CS | FS | SI | CL | ATTERBERG LL | PL | PI | WC | ODOT CLASS (GI) | BACK FILL |
|---|---|---|---|---|---|---|---|---|---|---|---|---|---|---|---|---|---|---|
| FILL: Soft, dark-brown mottled brown, **SILTY CLAY**, some fine to coarse sand, trace fine gravel, damp. | 634.5 | 1–2 | 1 2 2 | 6 | 56 | SS-1 | 0.75-1.0 | 1 | 21 | 4 | 23 | 51 | 41 | 19 | 22 | 23 | A-7-6 (13) | |
| FILL: Medium stiff, brown, **SILTY CLAY**, trace fine to coarse sand, trace fine to coarse gravel, damp. | 633.0 | 3–4 | 2 3 3 | 9 | 78 | SS-2 | 1.25-1.75 | - | - | - | - | - | - | - | - | - | A-6b (V) | |
| FILL: Medium stiff, brown, **SILTY CLAY**, trace fine to coarse sand, little fine to coarse gravel, damp. | 631.3 | 5 | 3 3 3 | 9 | 50 | SS-3 | 1.0-2.0 | - | - | - | - | - | 39 | 18 | 21 | 24 | A-6b (V) | |
| FILL: Stiff to very stiff, dark dray, **SILTY CLAY** little fine to coarse sand, trace fine to coarse gravel, moist | 625.8 | 6–8 | | | | ST-4 | 1.5-2.0 | 6 | 5 | 3 | 44 | 42 | 39 | 20 | 19 | 24 | A-6b (12) | |
| | | 9–10 | 7 8 8 | 24 | 0 | SS-NR | | - | - | - | - | - | - | - | - | - | | |
| POSSIBLE FILL: Medium-STIFF TO SITFF, gray, **SILTY CLAY**, some fine to coarse gravel, little fine to coarse sand, damp | 619.5 | 11–13 | | | | | | | | | | | | | | | | |
| | | 14–17 | 14 13 17 | 45 | 72 | SS-5 | 2.5-3.5 | - | - | - | - | - | - | - | - | - | A-2-6 (V) | |
| Very-dense, gray,**SHALE** highly weathered and limestone fragments, dry. | 616.5 | 18–19 | 50/5" | - | 100 | SS-6 | | - | - | - | - | - | - | - | - | - | Rock (V) | |
| **SHALE** gray, highly weathered to moderately weathered, very weak to weak. | | 21 | 60 | | 100 | NX-7 | | | | | | | | | | | CORE | |
| | 611.5 | 22–25 | 69 | | 100 | NX-8 | | | | | | | | | | | CORE | |

TR

EOB

NOTES: NONE

ABANDONMENT METHODS, MATERIALS, QUANTITIES: BACKFILLED WITH AUGER CUTTINGS

SME ODOT LOG(8.5X11)-CURRENT WITH PLATES - OH DOT.GDT - 8/30/17 13:25 - L:\RESOURCES\CS\LABORATORY\GINTW\PROJECTS\117817011.GPJ

S&ME JOB: 1178-17-011

| | | | |
|---|---|---|---|
| PROJECT: VAN BLARICUM ROAD | DRILLING FIRM / OPERATOR: CSD / M. JAMESON | DRILL RIG: CSD CME 55 | STATION / OFFSET: 14+10.0, 43.0 LT |
| TYPE: SETTLEMENT | SAMPLING FIRM / LOGGER: S&ME / C. BURTON | HAMMER: CME AUTOMATIC | ALIGNMENT: ROADWAY |
| PID: BR ID: | DRILLING METHOD: 3.25" HSA / NQ2 | CALIBRATION DATE: 7/3/17 | ELEVATION: 621.0 (MSL) EOB: 18.9 ft. |
| START: 8/1/17 END: 8/1/17 | SAMPLING METHOD: SPT / NQ2 | ENERGY RATIO (%): 90.3 | LAT / LONG: Not Recorded |

EXPLORATION ID **B-004**

PAGE 1 OF 1

| MATERIAL DESCRIPTION AND NOTES | ELEV. | DEPTHS | SPT/ RQD | $N_{60}$ | REC (%) | SAMPLE ID | HP (tsf) | GRADATION (%) GR | CS | FS | SI | CL | ATTERBERG LL | PL | PI | WC | ODOT CLASS (GI) | BACK FILL |
|---|---|---|---|---|---|---|---|---|---|---|---|---|---|---|---|---|---|---|
| Fill: Soft, dark-brown, **SILT AND CLAY**, some fine to coarse sand, damp. | 621.0 | | 1 1 1 | 3 | 44 | SS-1 | 3.5-4.5 | 0 | 24 | 6 | 24 | 46 | 40 | 21 | 19 | 21 | A-6b (11) | |
| Fill: Very stiff, brown, **SILTY CLAY**, some fine to coarse sand, some fine to coarse gravel, damp. | 618.3 | | | | | ST-2 | 3.0-3.25 | - | - | - | - | - | - | - | - | - | A-6b (V) | |
| Fill: Stiff, brown gray, **SILTY CLAY**, some fine to coarse sand, trace fine to coarse gravel, damp. | 615.5 | | 5 6 7 | 20 | 50 | SS-3 | 2.0-2.5 | - | - | - | - | - | 38 | 19 | 19 | 11 | A-6b (V) | |
| Loose, brown gray, **GRAVEL AND/OR STONE FRAGMENTS WITH SAND AND SILT**, damp. | 613.0 | | 3 4 5 | 14 | 17 | SS-4 | | - | - | - | - | - | - | - | - | 12 | A-2-4 (V) | |
| Very-dense, gray, **WEATHERED SHALE**, some limestone fragments | 609.3 | TR | 50/4" | - | 100 | SS-5 | | - | - | - | - | - | - | - | - | - | Rock (V) | |
| **INTERBEDDED SHALE (85%) AND LIMESTONE (15%)**: Shale, gray, highly weathered, very weak to weak, highly fractured; Limestone, gray, slightly weathered, strong, 2" layers at 14.1', 14.5' and 16.9'. (REC=66%) | 607.1 | | 0 | | 77 | NX-6 | | | | | | | | | | | CORE | |
| | 602.1 | EOB | 43 | | 100 | NX-7 | | - | - | - | - | - | - | - | - | 7 | CORE | |

NOTES: NONE

ABANDONMENT METHODS, MATERIALS, QUANTITIES: BACKFILLED WITH AUGER CUTTINGS

SME ODOT LOG(8.5X11)-CURRENT WITH PLATES - OH DOT.GDT - 8/30/17 13:25 - L:\RESOURCES\CS\LABORATORY\GINTW\PROJECTS\117817011.GPJ

S&ME JOB: 1178-17-011

| | | | | |
|---|---|---|---|---|
| PROJECT: VAN BLARICUM ROAD | DRILLING FIRM / OPERATOR: CSD / M. JAMESON | DRILL RIG: CSD CME 55 | STATION / OFFSET: 12+24.0, 29.0 LT | EXPLORATION ID **B-005** |
| TYPE: SETTLEMENT | SAMPLING FIRM / LOGGER: S&ME / A. DINGLER | HAMMER: CME AUTOMATIC | ALIGNMENT: ROADWAY | |
| PID: BR ID: | DRILLING METHOD: 3.25" HSA / NQ2 | CALIBRATION DATE: 7/3/17 | ELEVATION: 608.0 (MSL) EOB: 15.0 ft. | PAGE 1 OF 1 |
| START: 8/1/17 END: 8/1/17 | SAMPLING METHOD: SPT / NQ2 | ENERGY RATIO (%): 90.3 | LAT / LONG: Not Recorded | |

| MATERIAL DESCRIPTION AND NOTES | ELEV. 608.0 | DEPTHS | SPT/ RQD | $N_{60}$ | REC (%) | SAMPLE ID | HP (tsf) | GRADATION (%) GR | CS | FS | SI | CL | ATTERBERG LL | PL | PI | WC | ODOT CLASS (GI) | BACK FILL |
|---|---|---|---|---|---|---|---|---|---|---|---|---|---|---|---|---|---|---|
| Fill: Medium stiff, brown, **SANDY SILT**, some fine to coarse sand, little fine to coarse gravel, trace cobble fragments, damp. | 605.0 | | 5 4 3 | 11 | 67 | SS-1 | 1.0-2.0 | - | - | - | - | - | - | - | - | - | A-4a (V) | |
| Fill: Medium stiff, brown, **SILTY CLAY**, little fine cravel, little fine to coarse sand, contains cinders, damp. | 602.5 | | 2 3 4 | 11 | 39 | SS-2 | 2.5-3.0 | - | - | - | - | - | - | - | - | 15 | A-6b (V) | |
| Fill: Stiff, gray, **SILTY CLAY** with relic bedding similar to severly-weathered shale, trace limestone fragments, damp. | 600.0 | | 4 6 6 | 18 | 61 | SS-3 | 3.5 | - | - | - | - | - | 38 | 18 | 20 | 18 | A-6b (V) | |
| | 596.5 | TR | 6 4 4 | 12 | 0 | SS-NR | | - | - | - | - | - | - | - | - | - | | |
| **SHALE**, , gray, highly weathered, weak, dry. | 593.0 | EOB | 23 47 40 | 131 | 100 | SS-4 | | - | - | - | - | - | - | - | - | - | Rock (V) | |

NOTES: SEEPAGE ENCOUNTERED AT 8.5 FEET. ENCOUNTERED A COBBLES AT 8.5 FEET.

ABANDONMENT METHODS, MATERIALS, QUANTITIES: BACKFILLED WITH AUGER CUTTINGS

SME ODOT LOG(8.5X11)-CURRENT WITH PLATES - OH DOT.GDT - 8/30/17 13:25 - L:\RESOURCES\CS\LABORATORY\GINTW\PROJECTS\117817011.GPJ

S&ME JOB: 1178-17-011

| | | | |
|---|---|---|---|
| PROJECT: VAN BLARICUM ROAD | DRILLING FIRM / OPERATOR: CSD / M. JAMESON | DRILL RIG: CSD CME 55 | STATION / OFFSET: 15+10.0, 59.0 LT |
| TYPE: SETTLEMENT | SAMPLING FIRM / LOGGER: S&ME / A. DINGLER | HAMMER: CME AUTOMATIC | ALIGNMENT: ROADWAY |
| PID: BR ID: | DRILLING METHOD: 3.25" HSA / NQ2 | CALIBRATION DATE: 7/3/17 | ELEVATION: 628.0 (MSL) EOB: 10.0 ft. |
| START: 8/1/17 END: 8/1/17 | SAMPLING METHOD: SPT / NQ2 | ENERGY RATIO (%): 90.3 | LAT / LONG: Not Recorded |

EXPLORATION ID **B-006**

PAGE 1 OF 1

| MATERIAL DESCRIPTION AND NOTES | ELEV. 628.0 | DEPTHS | SPT/ RQD | $N_{60}$ | REC (%) | SAMPLE ID | HP (tsf) | GRADATION (%) GR | CS | FS | SI | CL | ATTERBERG LL | PL | PI | WC | ODOT CLASS (GI) | BACK FILL |
|---|---|---|---|---|---|---|---|---|---|---|---|---|---|---|---|---|---|---|
| Fill: Very-stiff, gray, **SILTY CLAY**, little fine to coarse gravel, trace fine to coarse sand, damp. | 625.0 | 1 | 10 7 7 | 21 | 33 | SS-1 | 3.0-4.5 | - | - | - | - | - | - | - | - | 20 | A-6b (V) | |
| Fill: Very-stiff, gark-brown, **SILTTY AND CLAY**, little fine to coarse sand, little fine to coarse gravel, contains cobble fragments, damp. | 623.6 | 2, 3, 4 | 7 9 | - | 92 | SS-2A | 1.0-1.5 | - | - | - | - | - | - | - | - | 15 | A-6a (V) | |
| Fill: Dense, gray, **SILT AND CLAY** and fine to coarse sand, little fine to coarse gravel, contains cobble fragments, damp. | 622.5 | 5 | 8 | | 33 | SS-2B | | - | - | - | - | - | - | - | - | - | A-6a (V) | |
| Fill: Very-stiff, gray mottled brown with red and black traces, **SILT AND CLAY**, some fine to coarse sand, little fine to coarse gravel, damp. | 620.0 | 6, 7 | 8 8 22 | 45 | 50 | SS-3 | 1.5-2.0 | - | - | - | - | - | 30 | 16 | 14 | 11 | A-6a (V) | |
| **SHALE**, gray, weathered, hard, contains limestone fragments, dry. | 618.0 | TR 8, 9 | 18 50/5" | - | 100 | SS-4 | | - | - | - | - | - | - | - | - | - | Rock (V) | |
| | | EOB 10 | | | | | | | | | | | | | | | | |

NOTES: NONE

ABANDONMENT METHODS, MATERIALS, QUANTITIES: BACKFILLED WITH AUGER CUTTINGS

SME ODOT LOG(8.5X11)-CURRENT WITH PLATES - OH DOT.GDT - 8/30/17 13:25 - L:\RESOURCES\CS\LABORATORY\GINTW\PROJECTS\117817011.GPJ

Date: 8/11/2017

Photographer: ASD

| | | |
|---|---|---|
| **1** | **Boring** | B-001 |
| | **Depth** | 20.5 to 25.5 feet |

Date: 8/11/2017

Photographer: ASD

| | | |
|---|---|---|
| **2** | **Boring** | B-002 |
| | **Depth** | 13.9 to 18.9 feet |

Date: 8/11/2017

Photographer: ASD

| | | |
|---|---|---|
| **3** | **Boring** | B-003 |
| | **Depth** | 20.5 to 25.5 feet |

Date: 8/11/2017

Photographer: ASD

| | | |
|---|---|---|
| **4** | **Boring** | B-004 |
| | **Depth** | 13.9 to 18.9 feet |

# FIELD TESTING PROCEDURES

Field Operations: The general field procedures employed by S&ME, Inc. are summarized in ASTM D 420 which is entitled "Investigating and Sampling Soils and Rocks for Engineering Purposes." This recommended practice lists recognized methods for determining soil and rock distribution and ground water conditions. These methods include geophysical and in situ methods as well as borings.

Borings are drilled to obtain subsurface samples using one of several alternate techniques depending upon the subsurface conditions. These techniques are:

a. Continuous 2-1/2 or 3-1/4 inch I.D. hollow stem augers;
b. Wash borings using roller cone or drag bits (mud or water);
c. Continuous flight augers (ASTM D 1425).

These drilling methods are not capable of penetrating through material designated as "refusal materials." Refusal, thus indicated, may result from hard cemented soil, soft weathered rock, coarse gravel or boulders, thin rock seams, or the upper surface of sound continuous rock. Core drilling procedures are required to determine the character and continuity of refusal materials.

The subsurface conditions encountered during drilling are reported on a field test boring record by a field engineer who is on site to direct the drilling operations and log the recovered samples. The record contains information concerning the boring method, samples attempted and recovered, indications of the presence of various materials such as coarse gravel, cobbles, etc., and observations between samples. Therefore, these boring records contain both factual and interpretive information. The field boring records are on file in our office.

The soil and rock samples plus the field boring records are reviewed by a geotechnical engineer. The engineer classifies the soils in general accordance with the procedures outlined in ASTM D 2488 and prepares the final boring records that are the basis for all evaluations and recommendations.

The final boring records represent our interpretation of the contents of the field records based on the results of the engineering examinations and tests of the field samples. These records depict subsurface conditions at the specific locations and at the particular time when drilled. Soil conditions at other locations may differ from conditions occurring at these boring locations. Also, the passage of time may result in a change in the subsurface soil and ground water conditions at these boring locations. The lines designating the interface between soil or refusal materials on the records and on profiles represent approximate boundaries. The transition between materials may be gradual. The final boring records are included with this report. The detailed data collection methods using during this study are discussed on the following pages.

Soil Test Borings: Soil test borings were made at the site at locations shown on the attached Boring Plan. Soil sampling and penetration testing were performed in accordance with ASTM D 1586.

The borings were made by mechanically twisting a 5-5/8" outer diameter auger into the soil. At regular intervals, the drilling tools were removed and samples obtained with a standard 1.4 inch I.D., 2 inch O.D., split tube sampler. The sampler was first seated 6 inches to penetrate any loose cuttings, then driven an additional foot with blows of a 140-pound hammer falling 30 inches. The number of hammer blows required to drive the sampler the final foot was recorded and is designated the "penetration resistance".

Representative portions of the samples, thus obtained, were placed in glass jars and transported to the laboratory. In the laboratory, the samples were examined to verify the driller's field classifications. Test Boring Records are attached which graphically show the soil descriptions and penetration resistances.

Soil Auger Soundings: Soil auger soundings were made at the site at the locations shown on the attached Boring Location Plan. The soundings were performed by mechanically twisting a steel auger into the soil. However, unlike the soil test borings, a smaller diameter solid stem auger was used and no split-spoon samples were obtained. The driller provided a general description of the soil encountered by observing the soils brought to the surface by the twisting auger. The auger was advanced until refusal materials were encountered and the refusal depth was noted by the driller. The auger is then withdrawn and the depths to water or caved materials are then measured and recorded by the driller.

Soil auger soundings provide a rapid, economical method of obtaining the approximate bedrock depth, groundwater depth, and general soil conditions at locations where detailed soil testing and sampling is not required.

Water Level Readings: Water table readings are normally taken in conjunction with borings and are recorded on the "Test Boring Records". These readings indicate the approximate location of the hydrostatic water table at the time of our field investigation. Where impervious soils are encountered (clayey soils) the amount of water seepage into the boring is small, and it is generally not possible to establish the location of the hydrostatic water table through water level readings. The ground water table may also be dependent upon the amount of precipitation at the site during a particular period of time. Fluctuations in the water table should be expected with variations in precipitation, surface run-off, evaporation and other factors.

The time of boring water level reported on the boring records is determined by field crews as the drilling tools are advanced. The time of boring water level is detected by changes in the drilling rate, soil samples obtained, etc. Additional water table readings are generally obtained at least 24 hours after the borings are completed. The time lag of at least 24 hours is used to permit stabilization of the ground water table which has been disrupted by the drilling operations. The readings are taken by dropping a weighted line down the boring or using an electrical probe to detect the water level surface. Occasionally the borings will cave-in, preventing water level readings from being obtained or trapping drilling water above the caved-in zone. The cave-in depth is also measured and recorded on the boring records.

# Appendix III – Laboratory Testing Results

Form No. TR-D2166-01
Revision No. : 0
Revision Date: 3/29/13
Client Report No: 1

# UNCONFINED COMPRESSIVE STRENGTH OF COHESIVE SOILS

*ASTM D2166*

**S&ME, Inc - Lexington 2020 Liberty Road, Suite 105 Lexington, KY 40505**

| | | | |
|---|---|---|---|
| Project No.: | 1178-17-011 | Report Date: | 08/17/17 |
| Project Name: | Van Blaricum Improvements | Test Date(s): | 08/10/17 |
| Client Name: | Hamilton County Engineer | | |
| Client Address: | 138 East Court St., Cincinnati, OH 45202 | | |
| Location: | B-3 Depth (ft.): 7.0 - 7.5 | Sample Date: | 08/01/17 |

Sample Description: Dark grey Lean clay CL

| *Type and Specification* | *S&ME ID #* | *Cal Date:* | *Type and Specification* | *S&ME ID #* | *Cal Date:* |
|---|---|---|---|---|---|
| Balance (0.1 gram) | 09481 | 07/10/17 | | | |
| Calipers (0.001 inches) | 24319 | 04/19/17 | | | |
| Load Frame | 20982 | 07/27/17 | | | |

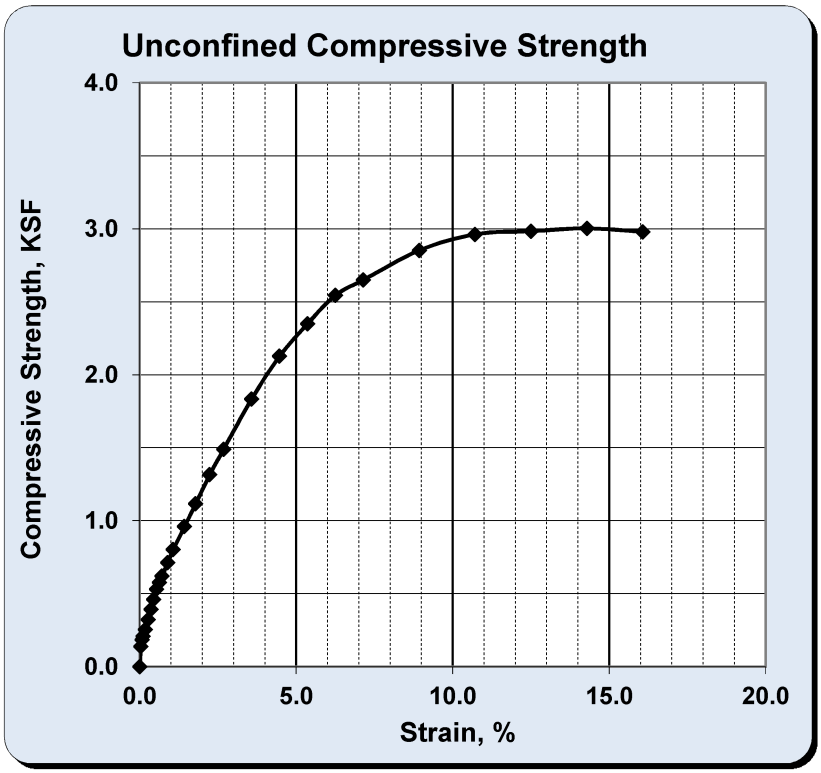


**Failed Specimen**

Type of Sample: UD
Source of Moisture Sample: 1/4th specimen

Initial Dry Unit Weight: 105.7 pcf
Initial Water Content: 23.5%
Unconfined Compressive Strength, $q_u$: **3.004** KSF
Undrained Shear Strength, $s_u$: **1.502** KSF

Liquid Limit: 39
Plasticity Index: 19
Height to Diameter Ratio: 2.0
Rate of Strain (%/m): 0.9
Strain at Failure: 14.3

***References / Comments / Deviations:***

| Jacob Folsom | | Project Professional | 8/17/2017 |
|---|---|---|---|
| *Technical Responsibility* | *Signature* | *Position* | *Date* |

*This report shall not be reproduced, except in full, without the written approval of S&ME, Inc.*

Form No. TR-D2166-01
Revision No. : 0
Revision Date: 2/5/13

# UNCONFINED COMPRESSIVE STRENGTH OF COHESIVE SOILS

*ASTM D2166*

**S&ME, Inc. - Knoxville 1413 Topside Road, Louisville, TN 37777**

| | | | |
|---|---|---|---|
| Project No.: | 1178-17-011 | Report Date: | 8/18/2017 |
| Project Name: | Van Blaricum Improvements | Test Date(s): | 8/17/2017 |
| Client Name: | Hamilton County Engineer | | |
| Client Address: | Cincinnati, OH | | |
| Boring #: | B-1 | | |
| | | Depth: | 21.5 - 22.2 ft |
| Sample Description: | Greenish gray shale with some clay and silt | | |

| *Type and Specification* | *S&ME ID #* | *Cal Date:* | *Type and Specification* | *S&ME ID #* | *Cal Date:* |
|---|---|---|---|---|---|
| Balance(s) | 9398 | 08/02/17 | Load Cell 1000 lbs. | 16036 | 04/14/17 |
| Calipers | 32243 | 01/26/17 | Deflection (inches) | 18429 | 10/14/16 |
| Load Frame | 8050 | 01/31/17 | Stop Watch | 31681 | 06/22/17 |

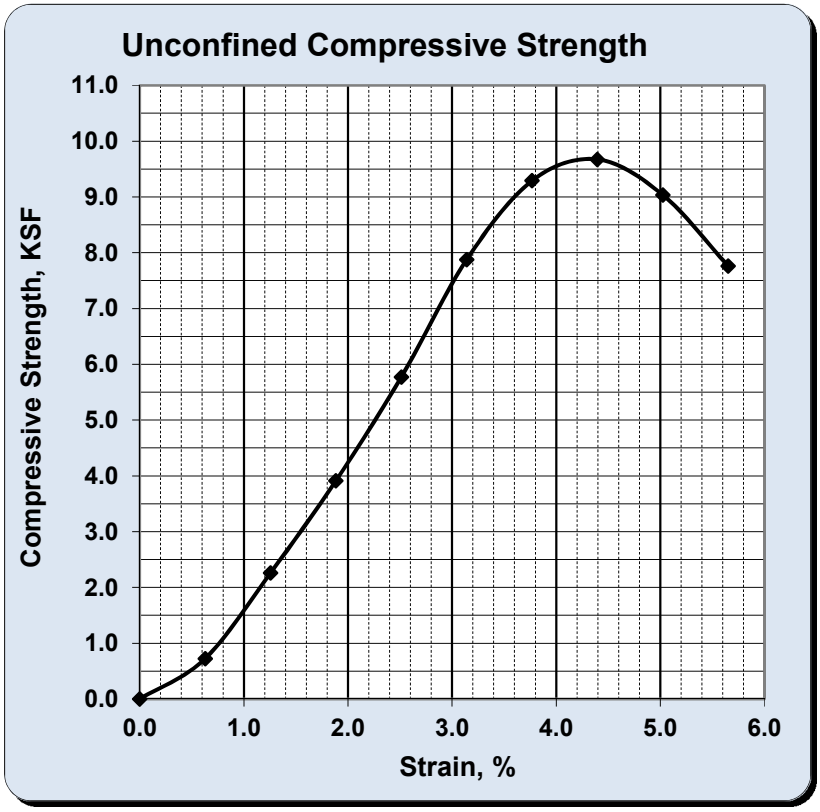


**Failed Specimen**

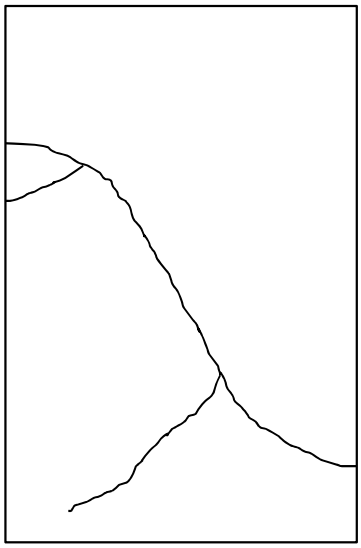

| | |
|---|---|
| Type of Sample: | Intact |
| Source of Moisture Sample: | Trimmings |
| Liquid Limit: | TNP |
| Plasticity Index: | TNP |
| Height to Diameter Ratio: | 2.1 |
| Rate of Strain (%/m): | 1.23 |
| Strain at Failure: | 4.4 |

Initial Dry Unit Weight: 125.6 pcf  Initial Water Content: 11.7%

Unconfined Compressive Strength, $q_u$: **9.672** KSF

Undrained Shear Strength, $s_u$: **4.836** KSF

***References / Comments / Deviations:***

TNP: Test Not Performed

| Jeffery A. Abston, P.E. | Jeffery A. Abston | Project Engineer | 8/18/2017 |
|---|---|---|---|
| *Technical Responsibility* | *Signature* | *Position* | *Date* |

*This report shall not be reproduced, except in full, without the written approval of S&ME, Inc.*

# UNCONFINED COMPRESSION
## (ASTM D7012 Method C)

S&ME, Inc. - Knoxville 1413 Topside Road, Louisville, TN 37777

Project Name: Van Blaricum Improvements
Project Number: 1178-17-011

Report Date: August 18, 2017
Reviewed By: Jason B. Burgess

| Boring No. | Sample No. | Depth (ft) | Dimensions, in. | | Shape (See Key) | Area ($in^2$) | Unit Weight ($lbs/ft^3$) | Loading Rate (psi/sec) | Maximum Load (lbs) | Strength (psi) | Moisture (%) |
|---|---|---|---|---|---|---|---|---|---|---|---|
| | | | Length | Diameter | | | | | | | |
| B-2 | N/A | 18.1 - 18.8 | 4.98 | 1.99 | F | 3.11 | 153.3 | 91 | 1,702 | 547 | 5.8 |
| B-4 | N/A | 18.0 - 18.7 | 3.43 | 1.65 | F | 2.14 | 154.1 | 90 | 1,093 | 511 | 7.4 |

NOTES: Effective (as received) unit weight as determined by RTH 109-93.
Loading rates were selected to target reaching failure between 2 and 15 minutes.
Test results for specimens not meeting the requirements of ASTM D4543 may differ from a test specimen that meets the requirements of ASTM D4543.

SHAPE KEY

ASTM D4543-08 *Standard Practice for Preparing Rock Core as Cylindrical Test Specimens and Verifying Conformance to Dimensional and Shape Tolerance* Section 1.2 - "Rock is a complex engineering material that can vary greatly as a function of lithology, stress history, weathering, moisture content and chemistry, and other natural geologic processes. As such, it is not always possible to obtain or prepare rock core specimens that satisfy the desirable tolerances given in this practice. Most commonly, this situation presents itself with weaker, more porous, and poorly cemented rock types and rock types containing significant or weak (or both) structural features. For these and other rock types which are difficult to prepare, all reasonable efforts shall be made to prepare a specimen in accordance with this practice and for the intended test procedure. However, when it has been determined by trial that this is not possible, prepare the rock specimen to the closest tolerances practicable and consider this to be the best effort and report it as such and if allowable or necessary for the intended test, capping the ends of the specimen as discussed in this practice is permitted."

A Test specimen measurements met the desired shape tolerances of ASTM D4543-08 (side straightness, end flatness & parallelism, and end perpendicularity to axis)

B Test specimen measurements met the desired shape tolerances of ASTM D4543-08 for end flatness & parallelism, and end perpendicularity to axis. Specimen did not meet the desired tolerance for side straightness. Specimen prepared to closest tolerances practicable.

C Test specimen measurements met the desired shape tolerances of ASTM D4543-08 for end flatness & parallelism. Specimen did not meet the desired tolerances for side straightness and end perpendicularity to axis. Specimen prepared to closest tolerances practicable.

D Test specimen measurements met the desired shape tolerances of ASTM D4543-08 for end flatness. Specimen did not meet the desired tolerances for side straightness, parallelism and end perpendicularity to axis. Specimen prepared to closest tolerances practicable.

E Test specimen measurements met the desired shape tolerances of ASTM D4543-08 for end flatness and end perpendicularity to axis. Specimen did not meet the desired tolerance for side straightness and parallelism. Specimen prepared to closest tolerances practicable.

F Test specimen physical characteristics precluded preparing specimens to the flatness tolerance specified in ASTM D4543, even with the best effort. The cores were cut to length and caps applied to end surfaces prior to testing.

Date: 8/17/2017

Photographer: Ben Painter

| | | |
|---|---|---|
| **1** | **Location / Orientation** | B-2 (18.1′ – 18.8′) |
| | **Remarks** | Unconfined Compressive Strength of Rock Core Specimen Before/After (ASTM D7012 Method C) |

Date: 8/3/2017

Photographer: Ben Painter

| | | |
|---|---|---|
| **2** | **Location / Orientation** | B-4 (18.0′ – 18.7′) |
| | **Remarks** | Unconfined Compressive Strength of Rock Core Specimen Before/After (ASTM D7012 Method C) |

## LABORATORY TESTING PROCEDURES

Soil Classification: Soil classifications provide a general guide to the engineering properties of various soil types and enable the engineer to apply past experience to current problems. In our investigations, samples obtained during drilling operations are examined in our laboratory and visually classified by an engineer. The soils are classified according to consistency (based on number of blows from standard penetration tests), color and texture. These classification descriptions are included on our "Test Boring Records."

The classification system discussed above is primarily qualitative and for detailed soil classification two laboratory tests are necessary: grain size tests and plasticity tests. Using these test results the soil can be classified according to the AASHTO or Unified Classification Systems (ASTM D 2487). Each of these classification systems and the in-place physical soil properties provides an index for estimating the soil's behavior. The soil classification and physical properties obtained are presented in this report.

Compaction Tests: Compaction tests are run on representative soil samples to determine the dry density obtained by a uniform compactive effort at varying moisture contents. The results of the test are used to determine the moisture content and unit weight desired in the field for similar soils. Proper field compaction is necessary to decrease future settlements, increase the shear strength of the soil and decrease the permeability of the soil.

The two most commonly used compaction tests are the Standard Proctor test and the Modified Proctor test. They are performed in accordance with ASTM D 698 and D 1557, respectively. Generally, the Standard Proctor compaction test is run on samples from building or parking areas where small compaction equipment is anticipated. The Modified compaction test is generally performed for heavy structures, highways, and other areas where large compaction equipment is expected. In both tests a representative soil sample is placed in a mold and compacted with a compaction hammer. Both tests have four alternate methods.

| Test | Method | Hammer Wt./Fall | Mold Diam. | Run on Matl. Finer Than | No. of Layers | No. of Blows/Layer |
|---|---|---|---|---|---|---|
| Standard | A | 5.5 lb./12" | 4" | No. 4 sieve | 3 | 25 |
| D 698 | B | 5.5 lb./12" | 4" | 3/8" sieve | 3 | 25 |
| | C | 5.5 lb./12" | 6" | 3/4" sieve | 3 | 56 |

| Test | Method | Hammer Wt./Fall | Mold Diam. | Run on Matl. Finer Than | No. of Layers | No. of Blows/Layer |
|---|---|---|---|---|---|---|
| Modified | A | 10 lb./18" | 4" | No. 4 sieve | 5 | 25 |
| D 1557 | B | 10 lb./18" | 4" | 3/8" sieve | 5 | 25 |
| | C | 10 lb./18" | 6" | 3/4" sieve | 5 | 56 |

The moisture content and unit weight of each compacted sample is determined. Usually 4 to 5 such tests are run at different moisture contents. Test results are presented in the form of a dry unit weight versus moisture content curve. The compaction method used and any deviations from the recommended procedures are noted in this report.

Atterberg Limits: Portions of the samples are taken for Atterberg Limits testing to determine the plasticity characteristics of the soil. The plasticity index (PI) is the range of moisture content over which the soil deforms as a plastic material. It is bracketed by the liquid limit (LL) and the plastic limit (PL). The liquid limit is the moisture content at which the soil becomes sufficiently "wet" to flow as a heavy viscous fluid. The plastic limit is the lowest moisture content at which the soil is sufficiently plastic to be manually rolled into tiny threads. The liquid limit and plastic limit are determined in accordance with ASTM D 4318.

Moisture Content: The Moisture Content is determined according to ASTM D 2216.

# Appendix IV – Site Reconnaissance Photographs

Date: 7/18/2017

Photographer: BCD

| | | |
|---|---|---|
| **1** | **Location / Orientation** | 39° 7'48.42"N; 84°40'45.62"W / Looking South |
| | **Remarks** | Pavement Cracking |

Date: 7/18/2017

Photographer: BCD

| | | |
|---|---|---|
| **2** | **Location / Orientation** | 39° 7'47.35"N; 84°40'46.05"W / Looking West |
| | **Remarks** | Sinkhole |

Date: 7/18/2017

Photographer: BCD

| | | |
|---|---|---|
| **3** | **Location / Orientation** | 39° 7'47.02"N; 84°40'46.52"W/ Looking South |
| | **Remarks** | Erosion within pavement and west of roadway. |

Date: 7/18/2017

Photographer: BCD

| | | |
|---|---|---|
| **4** | **Location / Orientation** | 39° 7'46.82"N; 84°40'47.04"W / Looking West |
| | **Remarks** | Erosion west of roadway |

Date: 7/18/2017

Photographer: BCD

| | | |
|---|---|---|
| 5 | **Location / Orientation** | 39° 7'46.61"N; 84°40'47.54"W / Looking West |
| | **Remarks** | Culvert Outlet, with Erosion |

Date: 7/18/2017

Photographer: BCD

| | | |
|---|---|---|
| 6 | **Location / Orientation** | 39° 7'47.85"N; 84°40'47.12"W / Looking South |
| | **Remarks** | Erosion within streambed, west of combined culvert |

Date: 7/18/2017

Photographer: BCD

| | | |
|---|---|---|
| 7 | **Location / Orientation** | 39° 7'47.76"N; 84°40'46.35"W / Looking North |
| | **Remarks** | Secondary sinkhole located along stream |

Date: 7/18/2017

Photographer: BCD

| | | |
|---|---|---|
| 8 | **Location / Orientation** | 39° 7'46.99"N; 84°40'45.03"W / Looking Northwest |
| | **Remarks** | Van Blaricum Road Culvert Inlet |

# Appendix V – Retaining Wall Design Drawings

# RETAINING WALL DESIGN

# VAN BLARICUM ROAD

## HAMILTON COUNTY, OHIO

39°07'47.1"N 84°40'46.3"W

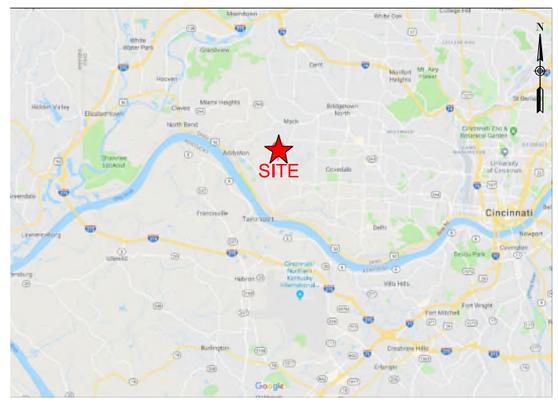


**VICINITY MAP**
NOT TO SCALE
(SOURCE: GOOGLE MAPS)

GENERAL NOTES

ELEVATION AND DESIGN DEVELOPED FROM RETAINING WALL LOCATION PLAN COPIED FROM "SCHEMATIC LAYOUT" AND "STREAM PLAN & PROFILE" (SHEETS 2 & 25 OF 35, 100% SUBMITTAL, DATE UNKNOWN) PREPARED BY THE KLEINGERS GROUP, SOIL TEST BORING FIELD EXPLORATION DATA PREPARED BY S&ME, INC. S&ME, INC. SHALL BE NOTIFIED OF ANY CHANGES TO OR DEVIATIONS FROM THE ABOVE REFERENCED PLANS IN ORDER TO REEVALUATE THIS DESIGN. ALL ELEVATIONS SHOWN IN THE PILE TABLE ARE INTERPOLATED FROM THE PROVIDED INFORMATION. THE WALL CONTRACTOR SHALL FIELD VERIFY AT THE TIME OF CONSTRUCTION.

IT IS THE RESPONSIBILITY OF THE CONTRACTOR TO FIELD VERIFY ALL CONDITIONS, GRADES, PROPERTY ENCROACHMENT, UTILITIES AND DIMENSIONS AT THE SITE PRIOR TO WALL CONSTRUCTION. IF THE WALL CONTRACTOR DISCOVERS ANY ERRORS, OMISSIONS OR DISCREPANCIES, HE SHALL CONTACT THE S&ME WALL DESIGN ENGINEER. THE WALL DESIGN ENGINEER WILL THEN ISSUE INSTRUCTIONS AS TO HOW TO PROCEED. SHOULD THE CONTRACTOR FAIL TO CONTACT THE WALL DESIGN ENGINEER, THEN THE DESIGN SHALL BE CONSIDERED VOID AND THE CONTRACTOR SHALL BE RESPONSIBLE FOR THE COST OF ANY ADDITIONAL WORK NECESSARY.

THE GENERAL CONTRACTOR SHALL BE RESPONSIBLE FOR INSTALLING ANY GUARDRAILS AND/OR FENCING NEEDED DURING CONSTRUCTION TO SATISFY SAFETY CONCERNS AND/OR GOVERNMENTAL REGULATIONS. THE CONTRACTOR AND/OR OWNER SHALL BE RESPONSIBLE FOR OBSERVING ALL APPLICABLE SAFETY LAWS AND REGULATIONS.

CONTRACTOR TO PROVIDE "AS-BUILT" WALL SURVEY AFTER COMPLETION OF WALL CONSTRUCTION.

SPECIAL NOTES

CIP CULVERT SHALL BE CONSTRUCTED PRIOR TO INSTALLATION OF REINFORCED SHAFTS/COLUMNS. REINFORCED SHAFTS/COLUMNS ADJACENT TO EACH SIDE OF THE CIP CULVERT SHOULD BE INSTALLED AS CLOSE A PRACTICAL TO THE CIP CULVERT, WITH REINFORCED AND NON-STRUCTUAL SHAFT INSTALLATION SPACED FROM BASED ON THE FIRST ELEMENTS AND PROCEEDING IN BOTH DIRECTIONS AWAY FROM THE CULVERT.

CIP BEAM WALL SHALL BE FORMED TO SPAN THE CIP CULVERT. FORM WORK IS NOT ALLOWED TO BEAR DIRECTLY AGAINST THE CIP CULVERT. A 2" FOAM SPACER OR OTHER ACCEPTABLE TEMPORARY METHOD SHALL BE INSTALLED BETWEEN THE CIP BEAM WALL AND CULVERT. AFTER CIP BEAM WALL CONSTRUCTION, ANY VOID SPACE SHALL BE FULLY GROUTED.

Ohio Utilities Protection Service
Call 811 before you dig

## SHEET LIST


| SHEET NO. | SHEET TITLE |
|---|---|
| R1 | TITLE SHEET & NOTES |
| R2 | WALL LOCATION PLAN |
| R3 | RETAINING WALL FACE ELEVATION |
| R4 | TYPICAL SECTION & DETAILS |
| R5 | CIP BEAM WALL PLAN & DETAILS |
| R6 | DRILLED SHAFT/COLUMN SCHEDULE & SPECIFICATIONS |



301 ZIMA PARK ROAD
SPARTANBURG, SC 29301
(864) 574-2360


PREPARED FOR
HAMILTON COUNTY ENGINEER'S OFFICE
138 EAST COURT ST
CINCINNATI, OHIO 45202

Ben Dusina
Mar 30 2018 10:25 AM

| NO. | DATE | DESCRIPTION | BY | CHK. |
|---|---|---|---|---|
| 0 | 3-28-18 | ISSUED FOR CONSTRUCTION | MGR. | DAS |

BCD
APV

TITLE SHEET & NOTES

CULVERT REPLACEMENT
VAN BLARICUM ROAD
HAMILTON COUNTY, OHIO

PROJECT NUMBER
1178-17-011

DRAWING NUMBER
R1 6

DRAWING PATH: \\CINCH1\Active\Projects\2017\GEO\1178-17-011 Ham Co Eng_Van Blaricum\Graphics\Retaining Wall Design\Final Drawings\Van Blaricum Soldier Pile Wall Design (Upload).dwg

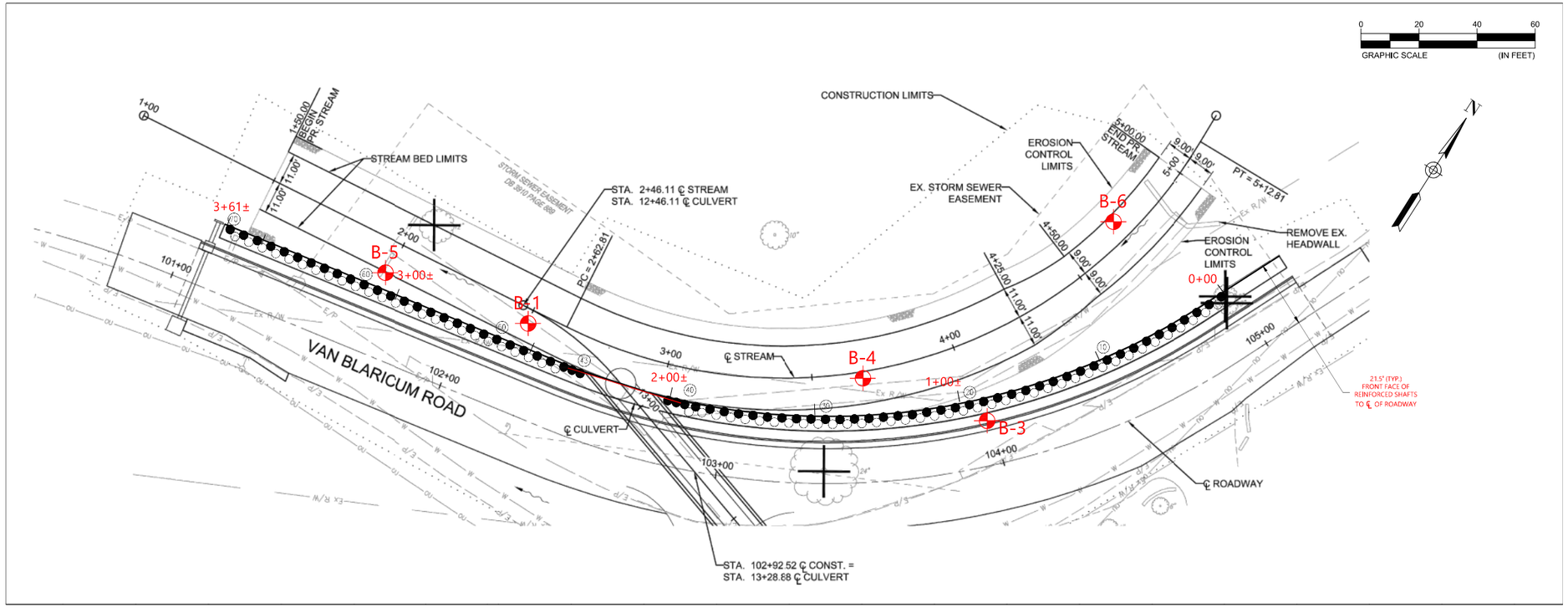


REFERENCE

RETAINING WALL LOCATION PLAN COPIED FROM "SCHEMATIC LAYOUT" AND "STREAM PLAN & PROFILE" (SHEETS 2 & 25 OF 35, 100% SUBMITTAL, DATE UNKNOWN) PREPARED BY THE KLEINGERS GROUP.

NOTE

RETAINING WALL LOCATION PLAN IS SHOWN FOR REFERENCE ONLY, DO NOT USE FOR WALL LAYOUT OR CONSTRUCTION.

## RETAINING WALL LOCATION PLAN

LEGEND:

- CIP RETAINING WALL LOCATION
- B-2 — APPROXIMATE SOIL TEST BORING LOCATION
- (40) — DRILLED SHAFT, REINFORCED, 36" Ø & #
- DRILLED SHAFT, NON-STRUCTURAL, 36" Ø

Ohio Utilities Protection Service
Call 811 before you dig


301 ZIMA PARK ROAD
SPARTANBURG, SC 29301
(864) 574-2360


PREPARED FOR
HAMILTON COUNTY ENGINEER'S OFFICE
138 EAST COURT ST
CINCINNATI, OHIO 45202

Ben Dusina
Mar 30 2018 10:26 AM

| NO. | DATE | DESCRIPTION | BY | MGR | CHK | DAS | APV | BCD |
|---|---|---|---|---|---|---|---|---|
| 0 | 3-28-18 | ISSUED FOR CONSTRUCTION | | | | | | |

# RETAINING WALL LOCATION PLAN

CULVERT REPLACEMENT
VAN BLARICUM ROAD
HAMILTON COUNTY, OHIO

PROJECT NUMBER
1178-17-011

DRAWING NUMBER
R2 6

DRAWING PATH: \\CINDM1\Active\Projects\2017\GEO\1178-17-011 Ham Co Eng_Van Blaricum\Graphics\Retaining Wall Design\Final Drawings\Van Blaricum Soldier Pile Wall Design (Upload).dwg

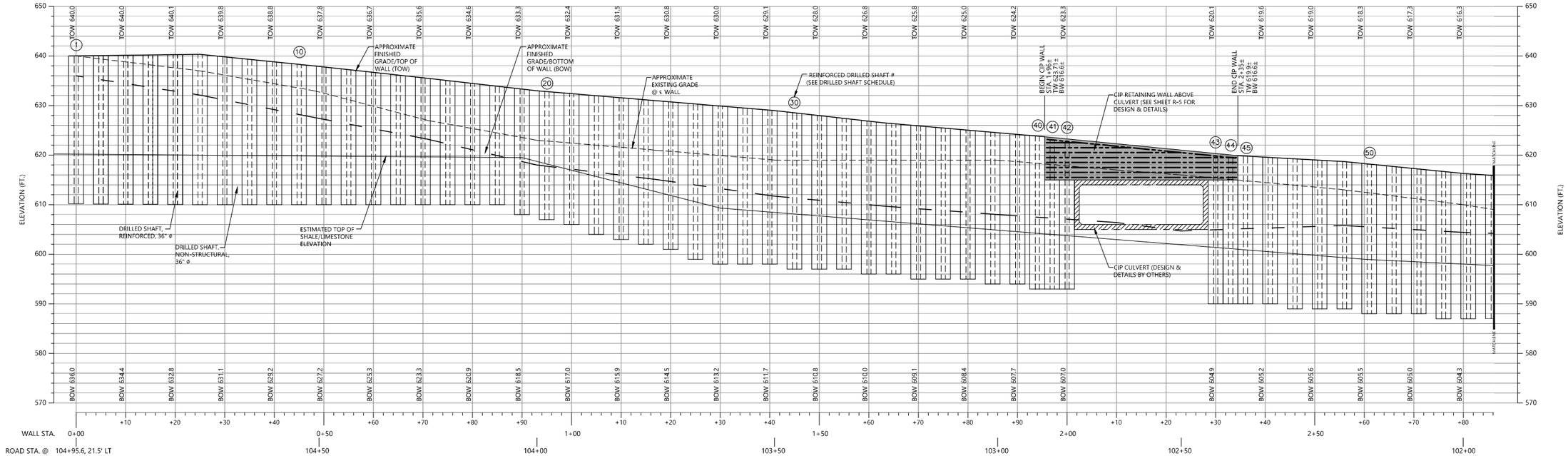


## RETAINING WALL FACE ELEVATION

SCALE: 1"=10' HORIZONTAL / 1"=10' VERTICAL

NOTE: INSTALLATION OF DRILLED SHAFTS WILL REQUIRE CASING, DEWATERING, ROCK EXCAVATION OR A COMBINATION THEREOF.

LEGEND:

⊛ - REINFORCED DRILLED SHAFT # (SEE DRILLED SHAFT SCHEDULE)

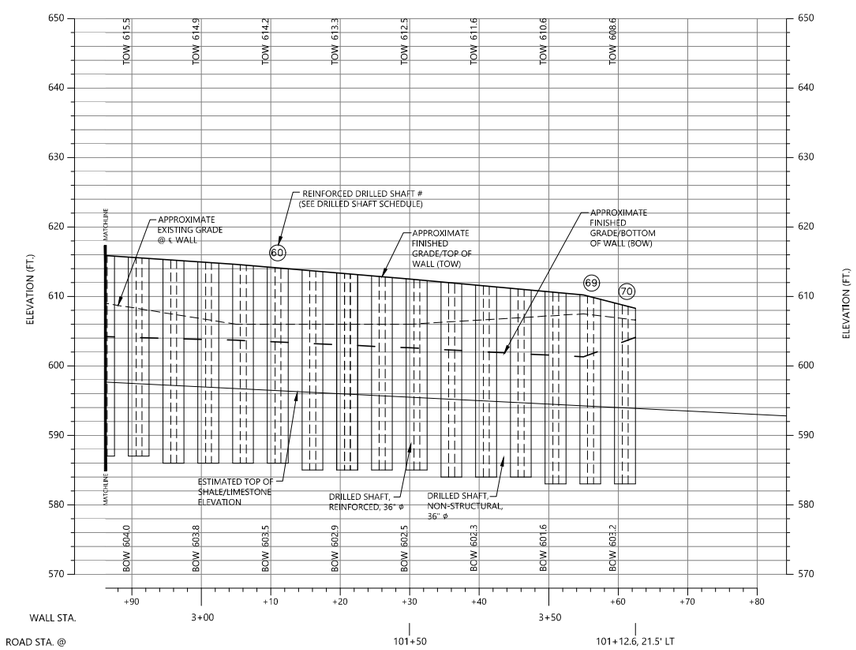


## RETAINING WALL FACE ELEVATION

SCALE: 1"=10' HORIZONTAL / 1"=10' VERTICAL

NOTE: INSTALLATION OF DRILLED SHAFTS WILL REQUIRE CASING, DEWATERING, ROCK EXCAVATION OR A COMBINATION THEREOF.

LEGEND:

- REINFORCED DRILLED SHAFT # (SEE DRILLED SHAFT SCHEDULE)


301 ZIMA PARK ROAD
SPARTANBURG, SC 29301
(864) 574-2360


PREPARED FOR

**HAMILTON COUNTY ENGINEER'S OFFICE**
138 EAST COURT ST
CINCINNATI, OHIO 45202

Ben Dusina
Mar 30 2018 10:26 AM

| NO. | DATE | DESCRIPTION | BY | MGR | CHK. | APV |
|---|---|---|---|---|---|---|
| 0 | 3-28-18 | ISSUED FOR CONSTRUCTION | | BCD | DAS | BCD |

# RETAINING WALL ELEVATION

CULVERT REPLACEMENT
VAN BLARICUM ROAD
HAMILTON COUNTY, OHIO

PROJECT NUMBER
1178-17-011

DRAWING NUMBER
R3 6

Ohio Utilities Protection Service
Call 811 before you dig

DRAWING PATH: \\CINOH1\Active\Projects\2017\GEO\1178-17-011 Ham Co Eng_Van Blaricum\Graphics\Retaining Wall Design\Final Drawings\Van Blaricum Soldier Pile Wall Design (Upload).dwg

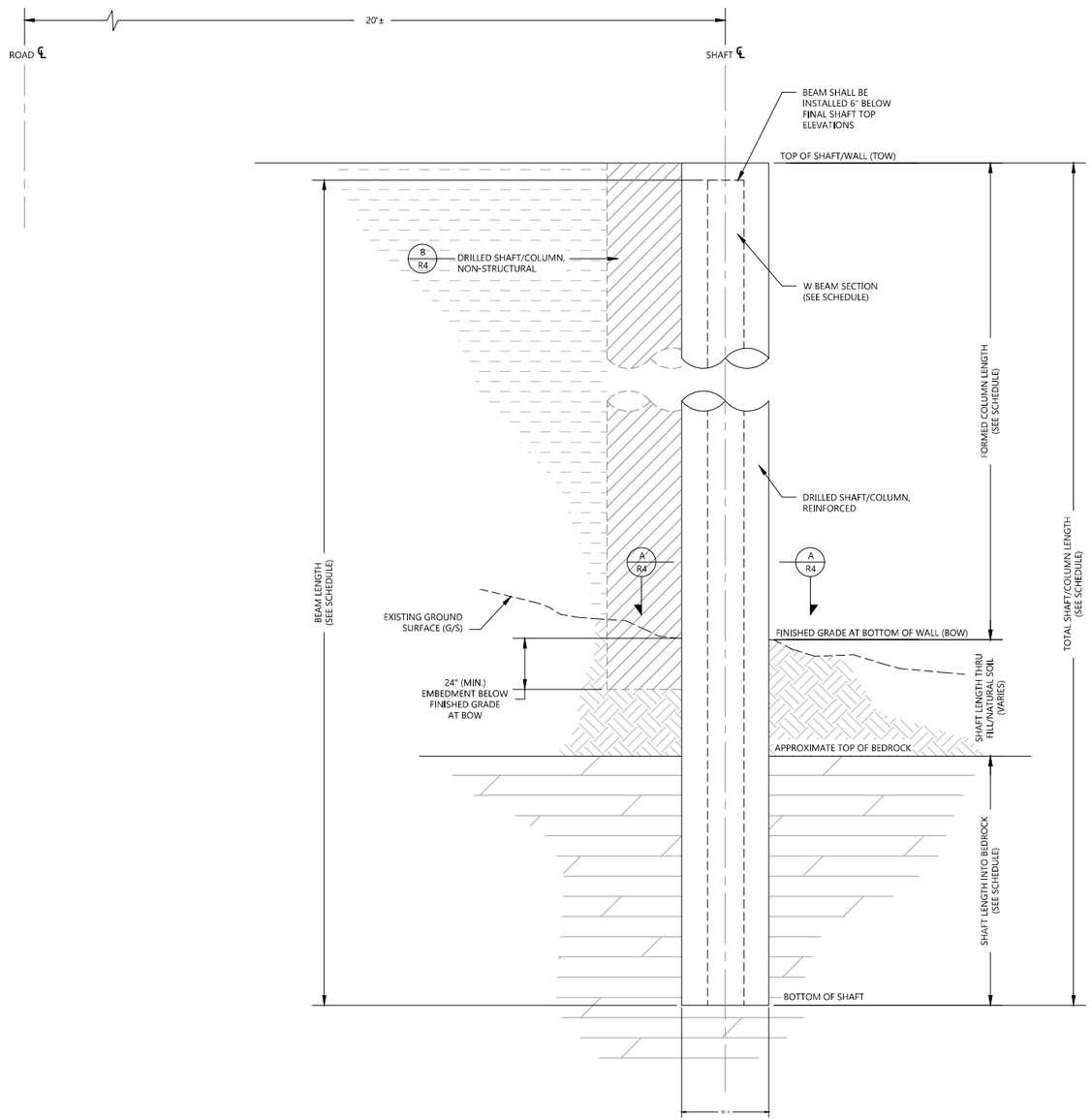


TYPICAL WALL SECTION
SCALE: NOT TO SCALE

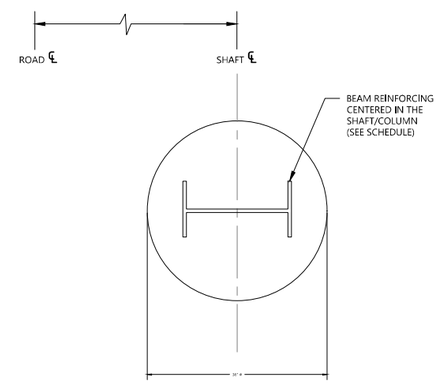


A R4 REINFORCED SECTION
SCALE: NOT TO SCALE

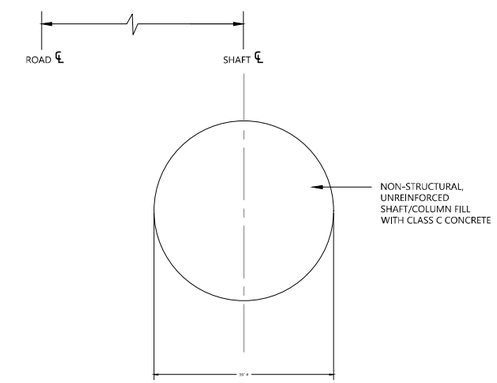


B R4 NON-STRUCTURAL SECTION
SCALE: NOT TO SCALE

301 ZIMA PARK ROAD
SPARTANBURG, SC 29301
(864) 574-2360

PREPARED FOR
HAMILTON COUNTY ENGINEER'S OFFICE
138 EAST COURT ST
CINCINNATI, OHIO 45202

Ben Dusina
Mar 30 2018 10:26 AM

| NO. | DATE | DESCRIPTION | BY | MGR | CHK | APV |
|---|---|---|---|---|---|---|
| 0 | 3-28-18 | ISSUED FOR CONSTRUCTION | | BCD | DAS | |

# TYPICAL SECTION & DETAILS

CULVERT REPLACEMENT
VAN BLARICUM ROAD
HAMILTON COUNTY, OHIO

PROJECT NUMBER
1178-17-011
DRAWING NUMBER
R4 6

Ohio Utilities Protection Service
Call 811 before you dig

DRAWING PATH: \\CENOH1\Active\Projects\2017\GEO\1178-17-011 Ham Co Eng_Van Blaricum\Graphics\Retaining Wall Design\Final Drawings\Van Blaricum Soldier Pile Wall Design Upload.dwg

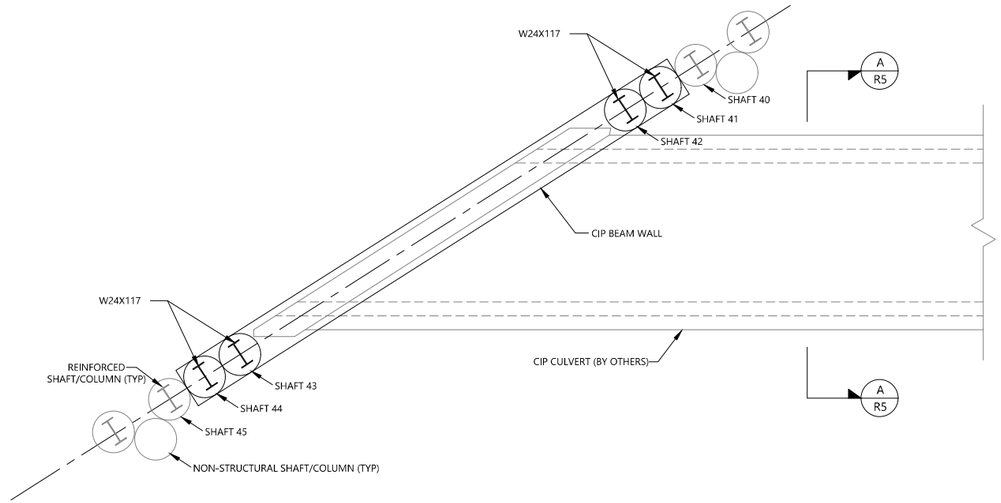


CIP BEAM WALL PLAN AT OUTLET
SCALE: NOT TO SCALE

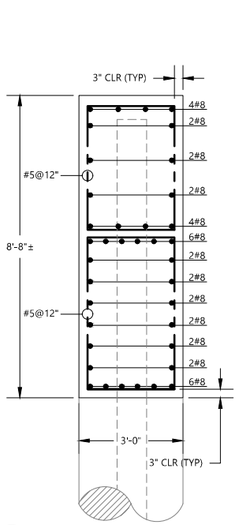


B R5 CIP BEAM WALL SECTION B-B
SCALE: NOT TO SCALE

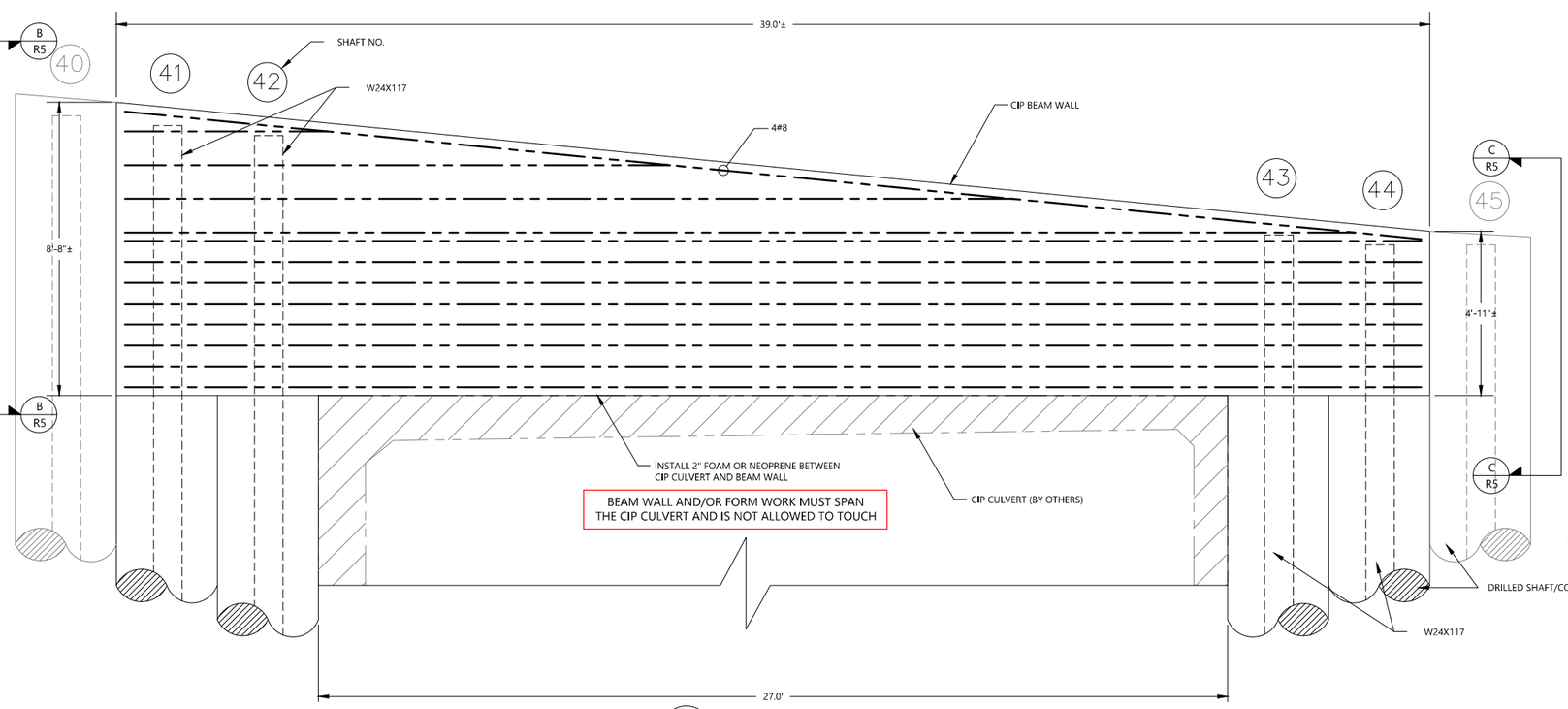


A R5 CIP BEAM WALL SECTION A-A
SCALE: NOT TO SCALE
NOTE: VERTICAL REBAR NOT SHOWN FOR CLARITY

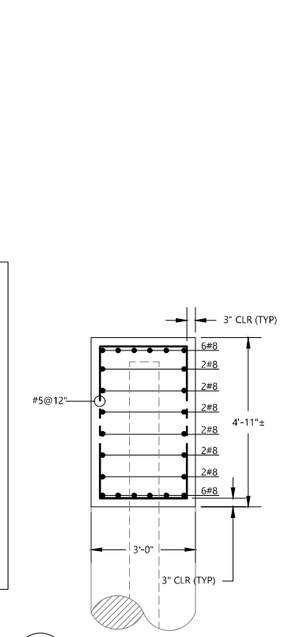


C R5 CIP BEAM WALL SECTION C-C
SCALE: NOT TO SCALE

Ohio Utilities Protection Service
Call 811 before you dig


301 ZIMA PARK ROAD
SPARTANBURG, SC 29301
(864) 574-2360


PREPARED FOR
HAMILTON COUNTY ENGINEER'S OFFICE
138 EAST COURT ST
CINCINNATI, OHIO 45202

Ben Dusina
Mar 30 2018 10:26 AM

| NO. | DATE | DESCRIPTION | BY | MGR | CHK. | APV |
|---|---|---|---|---|---|---|
| 0 | 3-28-18 | ISSUED FOR CONSTRUCTION | | BCD | DAS | BCD |

CIP BEAM WALL PLAN & DETAILS

CULVERT REPLACEMENT
VAN BLARICUM ROAD
HAMILTON COUNTY, OHIO

PROJECT NUMBER
1178-17-011
DRAWING NUMBER
R5 6

DRAWING PATH: \\CINOH1\Active\Projects\2017\GEO\1178-17-011 Ham Co Eng_Van Blaricum\Graphics\Retaining Wall Design\Final Drawings\Van Blaricum Soldier Pile Wall Design Upload.dwg

## DRILLED SHAFT/COLUMN SCHEDULE

| SHAFT NO. | SHAFT WALL STA. | SHAFT DIA. (IN.) | SHAFT SPACING (FT.) | TOW ELEV. (FT.) | EXISTING G/S ELEV. (FT.) | BOW ELEV. (FT.) | APPROX. TOP OF BEDROCK ELEV. (FT.) | APPROX. BOTTOM OF SHAFT ELEV. (FT.) | SHAFT LENGTH INTO BEDROCK (FT.) | SHAFT LENGTH ABOVE BEDROCK (FT.) | FORMED COLUMN LENGTH (FT.) | TOTAL SHAFT/COLUMN LENGTH (FT.) | EXPOSED WALL HEIGHT (FT.) | BEAM SIZE | BEAM LENGTH (+/-) (FT.) | NOTES |
|---|---|---|---|---|---|---|---|---|---|---|---|---|---|---|---|---|
| 1 | 0+00 | 36 | 5 | 640.0 | 640.0 | 636.0 | 620.2 | 610.0 | 10.2 | 19.8 | 0.0 | 30.0 | 4.0 | W24X55 | 29.5 | |
| 2 | 0+05 | 36 | 5 | 640.1 | 639.4 | 635.2 | 620.2 | 610.0 | 10.2 | 19.2 | 0.7 | 30.1 | 4.9 | W24X55 | 29.6 | |
| 3 | 0+10 | 36 | 5 | 640.1 | 638.8 | 634.4 | 620.2 | 610.0 | 10.2 | 18.6 | 1.3 | 30.1 | 5.7 | W24X55 | 29.6 | |
| 4 | 0+15 | 36 | 5 | 640.2 | 638.2 | 633.7 | 620.1 | 610.0 | 10.1 | 18.1 | 2.0 | 30.2 | 6.5 | W24X55 | 29.7 | |
| 5 | 0+20 | 36 | 5 | 640.2 | 637.6 | 632.9 | 620.1 | 610.0 | 10.1 | 17.5 | 2.6 | 30.2 | 7.3 | W24X55 | 29.7 | |
| 6 | 0+25 | 36 | 5 | 640.3 | 637.0 | 632.1 | 620.0 | 610.0 | 10.0 | 17.0 | 3.3 | 30.3 | 8.2 | W24X55 | 29.8 | |
| 7 | 0+30 | 36 | 5 | 639.8 | 636.1 | 631.1 | 620.0 | 610.0 | 10.0 | 16.1 | 3.7 | 29.8 | 8.7 | W24X55 | 29.3 | |
| 8 | 0+35 | 36 | 5 | 639.3 | 635.3 | 630.1 | 619.9 | 610.0 | 9.9 | 15.4 | 4.0 | 29.3 | 9.2 | W24X55 | 28.8 | |
| 9 | 0+40 | 36 | 5 | 638.8 | 634.4 | 629.2 | 619.9 | 610.0 | 9.9 | 14.5 | 4.4 | 28.8 | 9.6 | W24X55 | 28.3 | |
| 10 | 0+45 | 36 | 5 | 638.3 | 633.5 | 628.2 | 619.9 | 610.0 | 9.9 | 13.6 | 4.8 | 28.3 | 10.1 | W24X55 | 27.8 | |
| 11 | 0+50 | 36 | 5 | 637.8 | 632.5 | 627.2 | 619.8 | 610.0 | 9.8 | 12.7 | 5.3 | 27.8 | 10.6 | W24X55 | 27.3 | |
| 12 | 0+55 | 36 | 5 | 637.2 | 631.2 | 626.3 | 619.8 | 610.0 | 9.8 | 11.4 | 6.0 | 27.2 | 10.9 | W24X68 | 26.7 | |
| 13 | 0+60 | 36 | 5 | 636.7 | 629.8 | 625.3 | 619.7 | 610.0 | 9.7 | 10.1 | 6.9 | 26.7 | 11.4 | W24X68 | 26.2 | |
| 14 | 0+65 | 36 | 5 | 636.1 | 628.6 | 624.3 | 619.7 | 610.0 | 9.7 | 8.9 | 7.5 | 26.1 | 11.8 | W24X68 | 25.6 | |
| 15 | 0+70 | 36 | 5 | 635.6 | 627.2 | 623.4 | 619.5 | 610.0 | 9.5 | 7.7 | 8.4 | 25.6 | 12.2 | W24X68 | 25.1 | |
| 16 | 0+75 | 36 | 5 | 635.0 | 626.3 | 622.2 | 619.5 | 610.0 | 9.5 | 6.8 | 8.7 | 25.0 | 12.8 | W24X68 | 24.5 | |
| 17 | 0+80 | 36 | 5 | 634.4 | 625.4 | 621.1 | 619.5 | 610.0 | 9.5 | 5.9 | 9.0 | 24.4 | 13.3 | W24X68 | 23.9 | |
| 18 | 0+85 | 36 | 5 | 633.9 | 624.5 | 619.9 | 619.5 | 610.0 | 9.5 | 5.0 | 9.4 | 23.9 | 14.0 | W24X68 | 23.4 | |
| 19 | 0+90 | 36 | 5 | 633.3 | 623.5 | 618.7 | 619.5 | 608.0 | 11.5 | 4.0 | 9.8 | 25.3 | 14.6 | W24X68 | 24.8 | |
| 20 | 0+95 | 36 | 5 | 632.8 | 622.8 | 617.8 | 618.2 | 607.0 | 11.2 | 4.6 | 10.0 | 25.8 | 15.0 | W24X68 | 25.3 | |
| 21 | 1+00 | 36 | 5 | 632.4 | 622.4 | 617.2 | 616.9 | 606.0 | 10.9 | 5.5 | 10.0 | 26.4 | 15.2 | W24X68 | 25.9 | |
| 22 | 1+05 | 36 | 5 | 632.0 | 622.0 | 616.5 | 615.7 | 604.0 | 11.7 | 6.3 | 10.0 | 28.0 | 15.5 | W24X68 | 27.5 | |
| 23 | 1+10 | 36 | 5 | 631.6 | 621.6 | 615.9 | 614.4 | 603.0 | 11.4 | 7.2 | 10.0 | 28.6 | 15.7 | W24X68 | 28.1 | |
| 24 | 1+15 | 36 | 5 | 631.2 | 621.2 | 615.3 | 613.2 | 602.0 | 11.2 | 8.0 | 10.0 | 29.2 | 15.9 | W24X76 | 28.7 | |
| 25 | 1+20 | 36 | 5 | 630.8 | 620.8 | 614.7 | 611.8 | 601.0 | 10.8 | 9.0 | 10.0 | 29.8 | 16.1 | W24X76 | 29.3 | |
| 26 | 1+25 | 36 | 5 | 630.3 | 620.3 | 614.0 | 610.5 | 599.0 | 11.5 | 9.8 | 10.0 | 31.3 | 16.3 | W24X76 | 30.8 | |
| 27 | 1+30 | 36 | 5 | 629.9 | 619.9 | 613.3 | 609.3 | 598.0 | 11.3 | 10.6 | 10.0 | 31.9 | 16.6 | W24X76 | 31.4 | |
| 28 | 1+35 | 36 | 5 | 629.5 | 619.5 | 612.5 | 608.9 | 598.0 | 10.9 | 10.6 | 10.0 | 31.5 | 17.0 | W24X76 | 31.0 | |
| 29 | 1+40 | 36 | 5 | 629.0 | 619.0 | 611.9 | 608.5 | 598.0 | 10.5 | 10.5 | 10.0 | 31.0 | 17.1 | W24X76 | 30.5 | |
| 30 | 1+45 | 36 | 5 | 628.5 | 619.0 | 611.3 | 608.1 | 597.0 | 11.1 | 10.9 | 9.5 | 31.5 | 17.2 | W24X76 | 31.0 | |
| 31 | 1+50 | 36 | 5 | 628.0 | 619.0 | 610.9 | 607.8 | 597.0 | 10.8 | 11.2 | 9.0 | 31.0 | 17.1 | W24X76 | 30.5 | |
| 32 | 1+55 | 36 | 5 | 627.4 | 619.0 | 610.4 | 607.3 | 597.0 | 10.3 | 11.7 | 8.4 | 30.4 | 17.0 | W24X76 | 29.9 | |
| 33 | 1+60 | 36 | 5 | 627.8 | 619.0 | 610.0 | 606.9 | 596.0 | 10.9 | 12.1 | 8.8 | 31.8 | 17.8 | W24X76 | 31.3 | |
| 34 | 1+65 | 36 | 5 | 626.3 | 619.0 | 609.5 | 606.5 | 596.0 | 10.5 | 12.5 | 7.3 | 30.3 | 16.8 | W24X76 | 29.8 | |
| 35 | 1+70 | 36 | 5 | 625.9 | 619.0 | 609.2 | 606.1 | 595.0 | 11.1 | 12.9 | 6.9 | 30.9 | 16.7 | W24X76 | 30.4 | |
| 36 | 1+75 | 36 | 5 | 626.5 | 619.0 | 608.8 | 605.7 | 595.0 | 10.7 | 13.3 | 7.5 | 31.5 | 17.7 | W24X76 | 31.0 | |
| 37 | 1+80 | 36 | 5 | 625.0 | 619.0 | 608.5 | 605.4 | 595.0 | 10.4 | 13.6 | 6.0 | 30.0 | 16.5 | W24X76 | 29.5 | |
| 38 | 1+85 | 36 | 5 | 624.6 | 619.0 | 608.0 | 604.9 | 594.0 | 10.9 | 14.1 | 5.6 | 30.6 | 16.6 | W24X76 | 30.1 | |
| 39 | 1+90 | 36 | 5 | 624.2 | 618.7 | 607.7 | 604.6 | 594.0 | 10.6 | 14.1 | 5.5 | 30.2 | 16.5 | W24X76 | 29.7 | |
| 40 | 1+94 | 36 | 5 | 623.8 | 618.3 | 607.4 | 604.2 | 593.0 | 11.2 | 14.1 | 5.5 | 30.8 | 16.4 | W24X76 | 30.3 | |
| 41 | 1+97 | 36 | 5 | 623.7 | 618.1 | 607.2 | 604.0 | 593.0 | 11.0 | 11.0 | 0.0 | 22.0 | 16.5 | W24X117 | 30.2 | BOTTOM OF BEAM WALL = 616.6' (+/-) |
| 42 | 2+00 | 36 | 5 | 623.3 | 617.8 | 607.1 | 603.8 | 593.0 | 10.7 | 11.3 | 0.0 | 22.0 | 16.2 | W24X117 | 29.5 | BOTTOM OF BEAM WALL = 616.6' (+/-) |
| 43 | 2+30 | 36 | 5 | 620.3 | 615.4 | 604.9 | 601.3 | 590.0 | 11.3 | 13.7 | 0.0 | 25.0 | 15.4 | W24X117 | 29.8 | BOTTOM OF BEAM WALL = 616.6' (+/-) |
| 44 | 2+33 | 36 | 5 | 619.9 | 615.0 | 605.0 | 601.1 | 590.0 | 11.1 | 13.9 | 0.0 | 25.0 | 14.9 | W24X117 | 29.4 | BOTTOM OF BEAM WALL = 616.6' (+/-) |
| 45 | 2+36 | 36 | 5 | 619.8 | 614.8 | 605.1 | 600.9 | 590.0 | 10.9 | 13.9 | 5.0 | 29.8 | 14.7 | W24X68 | 29.3 | |
| 46 | 2+41 | 36 | 5 | 619.4 | 614.4 | 605.3 | 600.5 | 590.0 | 10.5 | 13.9 | 5.0 | 29.4 | 14.1 | W24X68 | 28.9 | |
| 47 | 2+46 | 36 | 5 | 619.3 | 613.9 | 605.5 | 600.0 | 589.0 | 11.0 | 13.9 | 5.4 | 30.3 | 13.8 | W24X68 | 29.8 | |
| 48 | 2+51 | 36 | 5 | 618.9 | 613.4 | 605.7 | 599.8 | 589.0 | 10.8 | 13.6 | 5.5 | 29.9 | 13.2 | W24X68 | 29.4 | |
| 49 | 2+56 | 36 | 5 | 618.6 | 613.0 | 605.8 | 599.3 | 589.0 | 10.3 | 13.7 | 5.6 | 29.6 | 12.8 | W24X68 | 29.1 | |
| 50 | 2+61 | 36 | 5 | 618.2 | 612.4 | 605.5 | 598.9 | 588.0 | 10.9 | 13.5 | 5.8 | 30.2 | 12.7 | W24X68 | 29.7 | |
| 51 | 2+66 | 36 | 5 | 617.7 | 611.8 | 605.2 | 598.7 | 588.0 | 10.7 | 13.1 | 5.9 | 29.7 | 12.5 | W24X68 | 29.2 | |
| 52 | 2+71 | 36 | 5 | 617.2 | 611.1 | 604.9 | 598.4 | 588.0 | 10.4 | 12.7 | 6.1 | 29.2 | 12.3 | W24X68 | 28.7 | |
| 53 | 2+76 | 36 | 5 | 616.7 | 610.5 | 604.6 | 598.2 | 587.0 | 11.2 | 12.3 | 6.2 | 29.7 | 12.1 | W24X68 | 29.2 | |
| 54 | 2+81 | 36 | 5 | 616.2 | 609.8 | 604.4 | 597.9 | 587.0 | 10.9 | 11.9 | 6.4 | 29.2 | 11.8 | W24X68 | 28.7 | |
| 55 | 2+86 | 36 | 5 | 615.9 | 609.0 | 604.2 | 597.7 | 587.0 | 10.7 | 11.3 | 6.9 | 28.9 | 11.7 | W24X68 | 28.4 | |
| 56 | 2+91 | 36 | 5 | 615.6 | 608.2 | 604.1 | 597.5 | 587.0 | 10.5 | 10.7 | 7.4 | 28.6 | 11.5 | W24X55 | 28.1 | |
| 57 | 2+96 | 36 | 5 | 615.2 | 607.5 | 603.9 | 597.2 | 586.0 | 11.2 | 10.3 | 7.7 | 29.2 | 11.3 | W24X55 | 28.7 | |
| 58 | 3+01 | 36 | 5 | 614.8 | 606.6 | 603.7 | 596.9 | 586.0 | 10.9 | 9.7 | 8.2 | 28.8 | 11.1 | W24X55 | 28.3 | |
| 59 | 3+06 | 36 | 5 | 614.5 | 606.0 | 603.6 | 596.7 | 586.0 | 10.7 | 9.3 | 8.5 | 28.5 | 10.9 | W24X55 | 28.0 | |
| 60 | 3+11 | 36 | 5 | 614.1 | 606.0 | 603.4 | 596.5 | 586.0 | 10.5 | 9.5 | 8.1 | 28.1 | 10.7 | W24X55 | 27.6 | |
| 61 | 3+16 | 36 | 5 | 613.6 | 606.0 | 603.2 | 596.2 | 585.0 | 11.2 | 9.8 | 7.6 | 28.6 | 10.4 | W24X55 | 28.1 | |
| 62 | 3+21 | 36 | 5 | 613.2 | 606.0 | 602.9 | 596.0 | 585.0 | 11.0 | 10.0 | 7.2 | 28.2 | 10.3 | W24X55 | 27.7 | |
| 63 | 3+26 | 36 | 5 | 612.8 | 606.0 | 602.8 | 595.7 | 585.0 | 10.7 | 10.3 | 6.8 | 27.8 | 10.0 | W24X55 | 27.3 | |
| 64 | 3+31 | 36 | 5 | 612.4 | 606.1 | 602.6 | 595.4 | 585.0 | 10.4 | 10.7 | 6.3 | 27.4 | 9.8 | W24X55 | 26.9 | |
| 65 | 3+36 | 36 | 5 | 611.8 | 606.4 | 602.3 | 595.2 | 584.0 | 11.2 | 11.2 | 5.4 | 27.8 | 9.5 | W24X55 | 27.3 | |
| 66 | 3+41 | 36 | 5 | 611.5 | 606.7 | 602.0 | 594.9 | 584.0 | 10.9 | 11.8 | 4.8 | 27.5 | 9.5 | W24X55 | 27.0 | |
| 67 | 3+46 | 36 | 5 | 611.0 | 606.9 | 601.8 | 594.7 | 584.0 | 10.7 | 12.2 | 4.1 | 27.0 | 9.2 | W24X55 | 26.5 | |
| 68 | 3+51 | 36 | 5 | 610.5 | 607.3 | 601.5 | 594.4 | 583.0 | 11.4 | 12.9 | 3.2 | 27.5 | 9.0 | W24X55 | 27.0 | |
| 69 | 3+56 | 36 | 5 | 610.0 | 607.4 | 601.7 | 594.2 | 583.0 | 11.2 | 13.2 | 2.6 | 27.0 | 8.3 | W24X55 | 26.5 | |
| 70 | 3+61 | 36 | 5 | 608.6 | 606.8 | 603.5 | 593.9 | 583.0 | 10.9 | 12.9 | 1.8 | 25.6 | 5.1 | W24X55 | 25.1 | |

## SPECIFICATIONS

1. THE CONTRACTOR SHALL COORDINATE WITH THE HAMILTON COUNTY ENGINEER AND ALL UTILITY COMPANIES TO CHECK FOR UNDERGROUND UTILITIES WITHIN THE WORK AREA BEFORE THE SHAFTS ARE DRILLED AND ANY EXCAVATION IS PERFORMED.
2. ALL DRILLED SHAFTS ARE TO BE REVIEWED BY A REPRESENTATIVE OF THE HAMILTON COUNTY ENGINEER PRIOR TO SETTING THE STEEL BEAM AND PLACING THE CONCRETE. THESE SERVICES SHALL BE COORDINATED BY THE CONTRACTOR.
3. STAKING OF THE DRILLED SHAFTS WALL WILL BE THE RESPONSIBILITY OF THE CONTRACTOR AND SHALL BE WITHIN 3 INCHES OF THE PLAN LOCATION.
4. DESIGN IS BASED ON A MINIMUM PENETRATION DEPTH 10 FEET INTO SHALE/LIMESTONE ("BEDROCK") FOR REINFORCED SHAFTS. IF FIELD CONDITIONS INDICATE GREATER DEPTHS, NOTIFY THE ENGINEER FOR FURTHER EVALUATION.
5. NON-STRUCTURAL SHAFTS SHALL BE CENTERED BETWEEN EACH REINFORCED SHAFT AND DRILLED TO A MINIMUM DEPTH OF 2 FEET BELOW BOTTOM OF WALL (BOW) FINISHED GRADE.
6. ALL DRILLED SHAFTS ARE TO BE EXCAVATED PLUMB AND THE BOTTOMS SHALL BE LEVEL AND FREE OF ALL LOOSE MATERIAL PRIOR TO PLACING THE CONCRETE. CONCRETE SHALL BE DIRECTED THROUGH A PIPE OR CHUTE , AND SHALL STRIKE THE STEEL BEAM, CASING AND/OR SIDEWALL DURING FREEFALL. THE CONTRACTOR SHALL MECHANICALLY VIBRATE THE TOP 6 FEET OF THE CONCRETE WITHIN THE SHAFTS.
7. THE CONTRACTOR SHALL BE PREPARED TO EXCAVATE ROCK AND CASE DRILLED SHAFTS IF RECOMMENDED BY A REPRESENTATIVE FROM HAMILTON COUNTY DUE TO EXCESSIVE SEEPAGE, FAIL-IN OR SOFT SOILS. CONCRETE SHALL NOT BE PLACED IF MORE THAN 4 INCHES OF STANDING WATER ACCUMULATES AT THE BOTTOM OF ANY EXCAVATION.
8. THE CONTRACTOR SHALL PROVIDE CYLINDRICAL FORMS AS NEEDED TO MAINTAIN UNIFORM DRILLED SHAFT DIMENSIONS ABOVE EXISTING GRADES. THE FORMS SHALL BE REMOVED AFTER CONCRETE SET AND PRIOR TO INSTALLING THE NON-STRUCTURAL DRILLED SHAFTS. THE TOP OF THE REINFORCED AND NON-STRUCTURAL SHAFTS TO BE FIELD ADJUSTED AS REQUIRED TO MATCH PROPOSED GRADE.

4. THE STEEL BEAMS EXTEND ABOVE THE TOP OF THE DRILLED SHAFT AND SHALL BE CONTINUOUS THROUGH THE FORMED COLUMN ABOVE EXISTING GRADE LINE.
5. STEEL BEAMS SHALL BE PLACED VERTICALLY WITHIN THE HOLE. PLACE THE STEEL BEAM SO THAT THE FLANGES ARE PARALLEL TO THE CENTERLINE OF THE ROW OF DRILLED SHAFTS. SUPPORT THE SOLDIER PILE SO THAT IT DOES NOT MOVE DURING CONCRETE PLACEMENT. DO NOT ALLOW THE VERTICAL ALIGNMENT OF THE SOLDIER PILE TO VARY BY MORE THAN 1/8 INCH PER FOOT OF DEPTH. DO NOT ALLOW THE ORIENTATION OF THE FLANGES TO VARY BY MORE THAN 10 DEGREES.
6. SPOILS FROM THE DRILLED SHAFT EXCAVATIONS SHALL NOT BE PLACED IN THE CREEK; OR SLOPE OF THE CREEK. SPOILS CAN BE USED WITHIN THE ROAD WORK AREA TO RECONSTRUCT THE SHOULDER, TO FILL OVER COMPLETED SHAFTS AND TO PROVIDE A UNIFORM 5 PERCENT SLOPE FROM THE EDGE OF THE ROAD TO THE CENTERLINE OF THE REINFORCED DRILLED SHAFTS. THE FILL SOILS PLACED ALONG THE SHOULDER SHALL BE COMPACTED TO AT LEAST 95 PERCENT OF THE STANDARD PROCTOR MAXIMUM DRY DENSITY (ASTM 0698). EXCESS SPOILS SHALL BE HAULED OFF SITE. DISTURBED AREAS SHALL BE SEEDED, STRAWED AND COVERED WITH ADEQUATELY PINNED NETTING FOLLOWING WALL INSTALLATION AND FINAL GRADING.
7. THE CONCRETE FOR THE DRILLED SHAFTS SHALL REACH A COMPRESSIVE OF AT LEAST 4,000 PSI IN 28 DAYS, SHALL CONTAIN 1.5 INCH MAXIMUM SIZE AGGREGATE, 4 TO 6 PERCENT ENTRAINED AIR AND BE PLACED AT A SLUMP NOT EXCEEDING 5 INCHES.
8. 7. THE CONCRETE FOR THE BEAM WALL SHALL REACH A COMPRESSIVE OF AT LEAST 4,000 PSI IN 28 DAYS, SHALL CONTAIN 1.5 INCH MAXIMUM SIZE AGGREGATE, 4 TO 6 PERCENT ENTRAINED AIR AND BE PLACED AT A SLUMP NOT EXCEEDING 4 INCHES.
9. THE CONTRACTOR SHALL FOLLOW THE GUIDELINES WITHIN ACI 301, "STANDARD SPECIFICATIONS FOR STRUCTURAL CONCRETE", AND, WHEN NECESSARY, IMPLEMENT PRACTICES OUTLINED WITHIN ACI 305, "HOT WEATHER CONCRETING", OR ACI 306, "COLD WEATHER CONCRETING".
10. STEEL BEAMS FOR THE REINFORCED DRILLED SHAFTS SHALL COMPLY WITH ASTM A572 AND HAVE A MINIMUM YIELD STRENGTH OF 50,000 PSI (GRADE 50).
11. REINFORCING STEEL SHALL CONFORM TO ASTM A-615 GRADE 60.

**ESTIMATED QUANTITIES**

| ITEM | TOTAL | UNIT | DESCRIPTION |
|---|---|---|---|
| A | 2000 | L.F. | DRILLED SHAFT, REINFORCED |
| B | 1025 | L.F. | DRILLED SHAFT, NON STRUCTURAL |
| C | 267 | SQ. FT. | CIP RETAINING WALL |

Ohio Utilities Protection Service
Call 811 before you dig


301 ZIMA PARK ROAD
SPARTANBURG, SC 29301
(864) 574-2360


PREPARED FOR
HAMILTON COUNTY ENGINEER'S OFFICE
138 EAST COURT ST
CINCINNATI, OHIO 45202

Ben Dusina
Mar 30 2018 10:26 AM

| NO. | DATE | DESCRIPTION | BY | CHK. | MGR. |
|---|---|---|---|---|---|
| 0 | 3-30-18 | ISSUED FOR CONSTRUCTION | DAS | APV | BCD |

DRILLED SHAFT/COLUMN SCHEDULE & SPECIFICATIONS

CULVERT REPLACEMENT
VAN BLARICUM ROAD
HAMILTON COUNTY, OHIO

PROJECT NUMBER
1178-17-011
DRAWING NUMBER
R6 6


DRAWING PATH: \\CINOH1\Active\Projects\2017\GEO\1178-17-011 Ham Co Eng_Van Blaricum\Graphics\Retaining Wall Design\Final Drawings\Van Blaricum Soldier Pile Wall Design Upload.dwg